Zoning Inspector

DUCHOUQUET TOWNSHIP

Tom Doorley
419-303-3912

17455 Hengstler Rd.
Wapakoneta, OH 45895

0
Filed for Record in
AUGLAIZE COUNTY, OHIO
CHRISTINA LAMBERT, RECORDER
04-03-2012 At 08:34 am.
AMEND ZONE 20.00

DUCHOUQUET TOWNSHIP
AUGLAIZE COUNTY, OHIO

ZONING RESOLUTION

Approved: April 1, 1997
Effective: April 30, 1997

Includes All Amendments to 12/31/11

Table of Contents

		PAGE
Chapter 1	General Provisions	1
Chapter 2	Applicability/General Requirements	2
Chapter 3	Provisions for Official Zoning Map	7
Chapter 4	Flood Plain Overlay District	8
Chapter 5	A-1 Agricultural Zoning District Regulations	10
Chapter 6	R-1 Low Density Residential Zoning District Regulations	13
Chapter 7	R-2 High Density Residential District Regulations	15
Chapter 8	Manufactured Home Park District Regulations	17
Chapter 9	C-1 General Commercial District Zoning Regulations	18
Chapter 10	I-1 General Industrial District Zoning Regulations	21
Chapter 11	PUD Planned Unit Development District	23
Chapter 12	Supplementary District Regulations	28
Chapter 13	Landscaping Requirements	38
Chapter 14	Parking and Loading Requirements	41
Chapter 15	Signs	49
Chapter 16	Nonconformities	55
Chapter 17	Enforcement	57
Chapter 18	Zoning Commission	60
Chapter 19	Board of Zoning Appeals	61
Chapter 20	Amendments	64
Chapter 21	Definitions	70

CHAPTER 1
GENERAL PROVISIONS

100 TITLE

This Resolution shall be known as and may be cited to as the "Zoning Resolution of Duchouquet Township, and is referred to herein as "this Resolution."

101 PURPOSE

The purpose of this Resolution is to promote the public health, safety, morals and general welfare of the residents of Duchouquet Township, and to promote the public health, safety, morals, comfort or general welfare; to conserve and protect property and property values; to secure the most appropriate use of land; and to facilitate adequate but economical provision of public improvements, all in accordance with a comprehensive plan.

102 INTERPRETATION AND RELATIONSHIP TO OTHER REGULATIONS

The interpretation and application of the provisions of this Resolution shall be held to be the minimum requirements, adopted for the promotion of the public health, safety, and general welfare. When the requirements of this Resolution conflict with the requirements of any other lawfully adopted rules, regulations, or resolutions, the most restrictive, or those imposing the higher standards, shall govern.

103 SEPARABILITY

Should any section of this Resolution be declared by a court to be unconstitutional, or invalid, such a decision shall not affect the validity of this Resolution as a whole, or any other parts thereof, other than the part declared unconstitutional or invalid.

104 REPEAL OF CONFLICTING RESOLUTIONS

All resolutions in conflict with this Resolution, or inconsistent with the provisions of this Resolution are hereby repealed to the extent necessary to give this Resolution full force and effect.

105 EFFECTIVE DATE

This Resolution shall become effective from and after the date of its approval and adoption, as provided in ORC 519.12.

106 AREA OF JURISDICTION

The provisions of this Resolution apply to all unincorporated areas of Duchouquet Township, Auglaize County, Ohio.

CHAPTER 2
APPLICABILITY / GENERAL REQUIREMENTS

200 GENERAL APPLICABILITY OF ZONING RESOLUTION

No structure, or part thereof shall be placed upon or moved onto land, erected, constructed, reconstructed, enlarged, or structurally altered, nor shall any building or land be used or occupied which does not comply with the district regulations established by this Resolution for the district in which the building, structure, and/or land is located.

200.01 Lot Size Requirements and the Subdivision of Land

No parcel of land held under one ownership, with or without a building, at the time this Resolution became effective, shall be reduced, nor shall any such parcel be subdivided in any manner below the minimum lot width and lot area required by this Resolution.

200.02 Reductions in Yard Requirements

No building may be enlarged which would result in decreasing a minimum yard requirement below the requirements of the applicable zoning district.

200.03 Location of Uses on a Lot

Unless otherwise specifically allowed, every principal building hereafter erected, relocated or structurally altered shall be located on a lot as herein defined.

200.04 Unsafe Buildings

Nothing in this Resolution shall prevent the strengthening, or restoring to a safe condition, any structure, or part thereof declared unsafe by a proper authority.

200.05 Conversion of Dwellings

The conversion of any building into a dwelling, or the conversion of any dwellings to accommodate an increased number of dwelling units or families, is permitted only in accordance with all requirements of this Resolution including those that require minimum lot sizes.

200.06 Parking/Loading Requirements

No land use may change from one use to another without meeting the parking/loading requirements for the new use.

201 AGRICULTURE

Except as noted below, nothing in this Resolution shall prohibit or otherwise regulate the use of land for agricultural purposes or, prohibit or otherwise regulate the construction of buildings or structures for agricultural purposes.

201.01 Dwellings

Dwellings anywhere in Duchouquet Township are not herein defined as agricultural structures, and are subject to all zoning requirements contained in this Resolution.

201.02 Agricultural Activity in Platted Subdivisions or Subdivided Areas

In any platted subdivision approved under section 711.05, 711.09, or 711.10 of the ORC and local subdivision regulations, or any area consisting of 15 or more contiguous lots (contiguous including those across a public street) approved under Section 711.131 of the

ORC and local subdivision regulations, agricultural activity may be regulated in a non-agricultural zoning district.

201.03 Farm Markets
Farm markets are regulated by this Resolution with respect to parking areas, and setback lines, as well as locations of ingress and egress.

201.04 Sale of Agricultural Products
The rental or sale of products used in agricultural operations and activities, such as fertilizer or farm implements, is regulated by this code and subject to the same restrictions and requirements as any other commercial establishment.

202 PUBLIC UTILITIES and CELLULAR TELEPHONE TOWERS

Pursuant to ORC 519.21, this Resolution does not regulate the location, erection, construction, reconstruction, removal, use or enlargement of any buildings or structure (including poles, wires, and substations), of any public utility, motor freight carrier, railroad, whether publicly or privately owned, or the use of land by any public utility, motor freight carrier, railroad, for the operation of its business. However, in accordance with ORC 519.21.1, when a public utility plans to construct a cellular telephone tower to be used in the provision of cellular telephone communication services, the procedures indicated therein shall be followed, and all zoning districts where dwellings of any kind are permitted shall be construed to be an area zoned for residential use.

203 SALE OF ALCOHOLIC BEVERAGES

Pursuant of ORC 519.21, this Resolution does not prohibit the sale of alcoholic beverages in any retail business, hotel, restaurant, private club, or similar establishment. However, regardless of whether or not an establishment sells alcoholic beverages or not, such use must be a permitted use in the zoning district in which such property is located.

204 MANUFACTURED HOUSING AND ASSOCIATED FACILITIES

204.01 Manufactured Home Parks, Recreational Vehicle Parks, Recreation Camps
Pursuant to ORC 3733.02, manufactured home parks, recreational vehicle parks, recreation camps and temporary park-camps are regulated with respect to specific development standards by the Ohio Department of Health. Said use however, must be listed as a permitted use within the zoning district within which such use is proposed to be located.

204.02 Placement of Mobile Homes on Individual Lots
All mobile homes shall be located within manufactured home parks, except as provided in Section 204.05 and 204.06 below. This requirement applies regardless of whether such mobile home is to be placed on a permanent foundation.

204.03 Placement of Manufactured Homes on Individual Lots
All manufactured homes, shall be located within manufactured home parks, unless they meet a minimum gross floor area of twelve hundred (1200) feet, a minimum required pitch of twelve to two and one half (12/21/2), and are placed on a permanent cement or block foundation.

204.04 Placement of Industrialized Units on Individual Lots
All industrialized units, also known as modular or preconstructed housing units, are permitted in any zoning district that permits residential use. Such units are to be permanently affixed to the land upon which they are located with a permanent cement or block foundation.

204.05 Sales, Display and Storage of Manufactured Homes, Mobile Homes, Industrialized Units, Recreational Vehicles, and Portable Camping Units

All sales, display and storage of manufactured homes, industrialized units, recreational vehicles and portable camping units are deemed commercial use, and shall be located in appropriate commercial zoning districts.

204.06 Temporary Use of a Mobile Home Unit

A mobile home may be used as a residence, temporary office, or other commercial or industrial space incidental to construction of a building or development on the premises on which the mobile home is located, only during the time that the construction or development is actively underway, and for a period not to exceed eighteen (18) months. Such starting date shall be determined with the issuance date of a building permit for the permanent structure.

204.07 Replacement of Mobile or Manufactured Homes

Any lawfully existing mobile home or manufactured home (that does not meet the minimum gross floor area or pitched roof requirements) on an individual lot, and outside an established manufactured home park, may be replaced with another manufactured home with prior approval from the Board of Zoning Appeals. The Board of Zoning Appeals shall consider whether the proposed replacement of such a manufactured home would represent an improvement in the neighborhood.

205 JUNK YARDS, JUNK MOTOR VEHICLE STORAGE, AUTO WRECKING YARD, AND INOPERABLE MOTOR VEHICLE STORAGE

Junk yards, as defined herein are not permitted in any zoning district. Junk motor vehicle storage and inoperable motor vehicle storage are also not permitted within any zoning district unless stored within a completely enclosed structure. Vehicles meeting the definition of a historical motor vehicle are not included in the same category as junk or inoperable vehicles. Any existing junk yard is classified as a non-conforming use.

206 MINIMUM DWELLING SIZES

No single family dwelling may be placed, erected, moved or constructed unless such dwelling provides more than 1,200 square feet of gross floor area, exclusive of garages, breezeways, unfinished basements, or other spaces not typically used as year round living area. Two-family dwellings and multi-family dwellings shall have at least eight-hundred and fifty (850) square feet of gross floor area, per unit, exclusive of garages, breezeways, unfinished basements, or other spaces not typically used as year round living area.

207 TEMPORARY BUILDINGS AND CONSTRUCTION EQUIPMENT STORAGE

Temporary buildings, construction trailers, equipment, and materials used with construction work are permitted in all zoning districts during the period construction work is in progress. Such temporary facilities and equipment shall be removed upon completion of the construction work. Storage of such construction trailers, construction equipment, construction materials or other equipment on a property not involved in any construction activity must be a permitted use and be allowed in a zoning district and shall require a zoning permit.

208 ADULT ENTERTAINMENT BUSINESSES

In addition to complying with all regulations within the district where they are located, all adult entertainment business shall comply with the following criteria:

A. No adult entertainment business shall be permitted in a location which is within one

thousand five hundred feet (1,500') of another adult entertainment business.

B. No adult entertainment business shall be permitted in a location which is within one thousand feet (1,000') of any church, any public or private school, any park, any playground, or any social services facility or neighborhood center.

C. No adult entertainment business shall be permitted in a location which is within five hundred feet (500') of any residence or boundary or any residential district.

D. No adult entertainment business shall be permitted in a location which is within five hundred feet (500') of any boundary of any residential district in a local unit of government abutting the township.

For the purposes of this section, certain words and/or terms have the following meaning:

Adult Entertainment Business: An adult bookstore, adult motion picture theater, adult drive-in motion picture theater, or any adult only entertainment establishment as defined by this resolution.

Adult Book Store: An establishment which utilizes 15 percent or more of its retail selling area for the purpose of retail sale or rental; or for the purpose of display by coin or slug-operated; or electronically or mechanically controlled still or motion picture machines, projectors, or other image-producing devices; or both, books, magazines, other periodicals, films, tapes and cassettes which are distinguished by their emphasis on adult material as defined in this resolution.

Adult Motion Picture Theater: An enclosed motion picture theater which is regularly used or utilizes 15 percent or more of its total viewing time for presenting material distinguished or characterized by an emphasis on matter depicting, describing, or related to adult material as defined by this resolution.

Adult Motion Picture Drive-in: An open air drive-in theater which is regularly used or utilizes 15 percent or more of its total viewing time for presenting material distinguished or characterized by an emphasis on matter depicting, describing, or related to adult material as defined in this resolution.

Adult Only Entertainment Establishment: An establishment where the patron directly or indirectly is charged a fee; where the establishment features entertainment or services which constitute adult material as defined in this chapter; or which features exhibitions, dance routines, or gyrational choreography or persons totally nude, topless, bottomless, female impersonators, or similar entertainment or services which constitute adult material.

Adult Material: Any book, magazine, newspaper, pamphlet, poster, print, picture, slide, transparency, figure, image, description, motion picture film, phonographic record or tape, other tangible thing, or any service capable of arousing interest through sight, sound, or touch, and:

Which material is distinguished or characterized by an emphasis on matter displaying, describing, or presenting sexual activity, masturbation, sexual excitement, nudity, bestiality, or human bodily functions of elimination, or

Which service is distinguished or characterized by an emphasis on sexual activity, masturbation, sexual excitement, nudity, bestiality, or human bodily functions of elimination.

Bottomless: Less than full opaque covering of male or female genitals, pubic area, or buttocks.

Topless: The showing of female breasts with less than a full opaque covering of any portion, thereof, below the top of the nipple.

Nude or Nudity: The showing, presentation, or depiction of human male or female genitals, pubic area, or buttocks with less than full, opaque covering of any portion thereof; or female breast(s) with less than a full, opaque covering of any portion thereof below the top of the nipple; or of covered male genitals in a discernibly turgid state.

Sexual Activity: As defined in Ohio revised code §2907.01.
Sexual Conduct: As defined in Ohio revised code §2907.01.
Sexual Contact: As defined in Ohio revised code §2907.01.
Sexual Excitement: As defined in Ohio revised code §2907.01.

209 SPECIAL HOUSING TYPES

The regulation of special housing types such as Foster Homes, Adult Family Homes, Adult Group Homes, and Adult Care Facilities is subject to Ohio Revised Code Chapter 3722 and Section 2151.41.8.

209.01 Foster Homes

Any foster home or family foster home shall be considered a residential use of property for purposes of township zoning and shall be permitted use in all zoning districts in which residential uses are permitted.

209.02 Adult Family Home

Any person may operate an adult family home licensed as an adult care facility as a permitted use in any residential district. Such adult family homes are required to comply with area, height, and yard requirements imposed on all single family residences.

209.03 Adult Group Home

Adult group homes are a conditionally permitted use in the multiple-family residential district (R-2). In approving a request to establish an adult group home, the Board of Zoning Appeals may establish special conditions relating to site layout, nature and height of walls, screens and fences, yard requirements, parking and signage. The Board may also consider the proximity of other adult family homes and adult group homes when considering whether to approve a proposed adult group home pursuant to Section 1904.

210 RESIDENTIAL REQUIREMENTS

All residences and additions to residences shall be placed on a permanent foundation as defined in this resolution. Additionally, all new residences are required to have a preliminary approval for a sewage system from the Department of Health and provide a copy of such approval with the zoning permit application.

CHAPTER 3
PROVISIONS FOR OFFICIAL ZONING MAP

300 OFFICIAL ZONING MAP

The location and boundaries of zoning districts are shown on the map titled "The Official Duchouquet Township Zoning Map." A certified copy of this map is on file in the office of the Board of Duchouquet Township Trustees and said map, with all notations, dimensions, and designations shown thereon are hereby declared to be a part of this Resolution. The Official Zoning Map shall be signed by the Duchouquet Township Trustees and attested to by the Duchouquet Township Clerk.

301 INTERPRETATION OF DISTRICT BOUNDARIES

Unless otherwise indicated, where uncertainty exists with respect to the boundaries of any of the zoning districts as shown on the Official Zoning Map, the following rules shall apply:

301.01 Parallel District Boundaries

Where district boundaries appear to be approximately parallel to the center lines or street lines of streets, or the center lines or right-of-way lines of highways, such district boundaries shall be construed as parallel thereto and at such distance therefrom as indicated on the Official Zoning Map. If no distance is given, such dimensions shall be determined by the use of the scale shown on the Official Zoning Map.

301.02 Lot Lines, Railroad Lines, and Waterways

Where district boundaries approximately follow lot lines, such lot lines shall be construed as a boundary of a zoning district. Where the boundary of a district follows a railroad line, such boundary shall be deemed to be located in the middle of the main tracks of said railroad line. Where the boundary of a district follows (or parallels) a waterway, such boundary shall be deemed to be located in the middle of the centerline of said waterway.

301.03 Interpretation by Board of Zoning Appeals

Any questions of interpretation of the Official Zoning Map, which cannot otherwise be resolved, shall be referred to the Board of Zoning Appeals for determination, in accordance with Section 1902.

302 ESTABLISHMENT OF DISTRICTS

For the purpose of regulating and restricting the location of buildings, structures and land use, Duchouquet Township is divided into zoning districts as shown on the Official Zoning Map. These districts include the following, and may be illustrated on the Official Zoning Map.

ZONING DISTRICTS

FP	Floodplain District
A-1	Agricultural District
R-1	Low Density Residential District
R-2	High Density Residential District
MHP	Manufactured Home Park
C-1	General Commercial District
I-1	General Industrial

CHAPTER 4
FLOOD PLAIN OVERLAY DISTRICT

400 PURPOSE

This district is established to help control development in areas that have been found to be subject to flooding. The boundaries of the Floodplain District have been placed on the Official Zoning Map to most accurately reflect the most current available information on floodplain boundaries. Where questions arise concerning the specific boundaries of this Floodplain District, the Auglaize County Flood Plain Administrator shall make a determination of the boundaries of the Floodplain District using the best and most current information available, including the most recent maps produced by the National Flood Insurance Program (see FEMA panels #39011C0050 C & 39011C0105 C).

This zoning district is an overlay zoning district that imposes development standards beyond those contained in the underlying zoning district.

401 Principal Permitted Uses

Except for those prohibited uses described in Section 400.3 herein, any use that is allowed within the underlying zoning district is permitted provided evidence is shown that the proposed new structure or land use is in compliance with the Auglaize County Floodplain Regulations.

402 Conditional Permitted Uses

Except for those prohibited uses described in Section 400.3 herein, any use that is conditionally permitted within the underlying zoning district is conditionally permitted provided evidence is shown that the proposed new structure or land use is in compliance with the Auglaize County Floodplain Regulations.

403 Prohibited Uses

Regardless of whether a use is permitted or conditionally permitted in an underlying zoning district, no land use which involves the storage of materials that are flammable, or explosive, or involve the storage regulated or hazardous materials as defined and listed in the Comprehensive Environmental Response, Compensation and Liability Act of 1980 (CERCLA), Title III of the Superfund Amendments and Re-authorization Act (SARA), and the Emergency Planning and Community Right to Know Act of 1986.

404 Minimum Yard Setbacks for Principal Structures

All principal structures shall meet the yard requirements defined in the underlying zoning district.

405 Minimum Setbacks for Accessory Structures

All accessory structures shall meet the yard requirements defined in the underlying zoning district.

406 Minimum Lot Dimensions

All lots shall meet the yard requirements defined in the underlying zoning district.

407 Other Development Standards

All other requirements established in the underlying zoning district apply within the flood plain overlay district.

CHAPTER 5
A-1 AGRICULTURAL DISTRICT REGULATIONS

500 PURPOSES

The A-I Agricultural District is hereby created in order that there are areas within Duchouquet Township, Auglaize County, Ohio, exclusively reserved for agricultural cultivation, very low density residential development and other essentially non-urban activities, so that the basically rural character of these areas may be preserved and maintained.

501 PRINCIPAL PERMITTED USE

The following uses are permitted in the Agricultural Zoning District:

1) Agriculture;

2) Commercial grain elevator/structure;

3) Single family dwellings, including Manufactured Homes (subject to Section 503);

4) Public use;

5) Public or private schools;

6) Nurseries, including the sale of plant materials;

7) Golf courses;

8) Farm markets (see Section 509;

9) Accessory uses such as private garages, swimming pools (See Section 1205.01), and accessory structures such as storage sheds;

10) Home Occupations (See Section 1206);

11) Adult family home; and

12) Any other use deemed to be of a similar nature as those above by the Board of Zoning Appeals in accordance with Section 1902.

502 CONDITIONALLY PERMITTED USES

The following uses may be approved by the Board of Zoning Appeals in accordance with Section 1902 in the Agricultural Zoning District:

1) Single family dwellings, including Manufactured Homes (subject to Section 503);

2) Private recreational areas and facilities such as swimming pools (see Section 1205.02), recreation clubs, summer camps;

3) Use and structures that are customarily accessory to a principal use, on an individual lot without a principal use or structure;

4) Kennels;

5) Churches or Place of Religious Worship;

6) Bed and Breakfast; and

7) Cemeteries.

8) Two-Family Dwellings.

9) Multi-Family Dwellings

10) Small Wind Turbines (See Section 1215)

503 DWELLINGS NEAR CONFINEMENT OPERATIONS

Because of the special considerations that relate to confinement operations, all single family dwellings in the A-1 zoning district, which would be within one half mile (2,640 feet) of a large confinement operation building are deemed to be a conditional use. The term "large confinement operation" refers to facilities and operations that involve, or are designed to involve, more than 100,000 pounds of animal body weight.

504 MINIMUM YARD SETBACKS FOR PRINCIPAL STRUCTURES (SEE ALSO SECTION 1202)

All principal structures shall meet the following yard requirements:

1) Front Yards: There shall be a minimum front yard depth of not less than eighty (80) feet from any State Highway, and not less than fifty (50) feet from any County or Township Road, measured from the right-of-way line, or from the front lot line, whichever is furthest from the road's edge.

2) Side Yards: There shall be a minimum side yard of fifteen (15) feet.

3) Rear Yards: There shall be a minimum rear yard of twenty-five (25) feet.

505 MINIMUM SETBACKS FOR ACCESSORY STRUCTURES

All accessory structures shall meet the following yard requirements:

Except for roadside stands and farm markets, offering the sale of agricultural products produced on the premises, accessory structures may not be located within the required front yard setback, or within ten (10) feet of any side or rear property line. All accessory structures shall not be located closer than ten (10) feet to a property line.

506 HEIGHT LIMITATIONS

No dwelling or other structure shall exceed thirty-five (35) feet in height.

507 MINIMUM LOT AREA AND MINIMUM LOT WIDTH

Lots shall not be less than 1 acre. Lots less than 5 acres must have a maximum of three (3) to one (1) lot depth to lot width ratio (Lot depth may not exceed 3 time lot width). The lot width shall be measured at the required front setback. Lots 5 acres or more shall have a minimum lot width of fifty (50) feet at the required front setback.

508 SIGN REGULATIONS

All non-residential permitted uses (except for home occupations) may have one illuminated sign with not more than twenty-five (25) square feet of total sign area.

509 FARM MARKETS

Farm markets and roadside stands may not be located in the public right-of-way and shall provide off-street parking in accordance with Chapter 14. All points of ingress or egress into parking areas may not be located within 50 feet of any intersecting street. All permanent, as well as temporary, structures are required to obtain a zoning permit in accordance with Section 1704.

510 SUBDIVISION OF LAND IN THE A-1 ZONING DISTRICT

For the purpose of regulating population density without requiring large minimum lot sizes that can be a waste of land resources, this provision helps to preserve the rural character of parts of Duchouquet Township, and to discourage random and unplanned urban development in predominantly agricultural areas. The subdivision of land in the A-1 Agricultural Zoning District is limited as follows:

Following the effective date of this Resolution, any parcel of land shown as a unit on the tax map at the effective date of this resolution may thereafter be subdivided into not more than four (4) lots that are less than five (5) acres in size within a ten (10) year period. All subdivision activity shall be accomplished in accordance with applicable subdivision regulations.

CHAPTER 6
R-1 LOW DENSITY RESIDENTIAL DISTRICT ZONING REGULATIONS

600 PURPOSES

The R-1 Low Density Residential District is hereby created to provide suitable areas where lower density residential development of a suburban nature may take place. Such areas may be served with central water and/or central sewers, and are characteristically lower density rural residential development.

601 PRINCIPAL PERMITTED USE

The following use is permitted in the Low Density Residential District:

1) Adult family home;

2) Agriculture (outside platted subdivisions or subdivided areas -See Section 201.02);

3) Golf courses;

4) Home Occupations (see Section 1206);

5) Public or private schools;

6) Public uses;

7) Single family dwellings;

8) Storm management ponds (see Section 1214);

9) Accessory use such as private garages, swimming pools (See Section 1205.01), and accessory structures such as storage sheds; and

10) Any other use deemed to be of a similar nature as those above by the Board of Zoning Appeals in accordance with Section 1902.

602 CONDITIONALLY PERMITTED USE

The following use may be approved by the Board of Zoning Appeals in accordance with Section 1902 in the Low Density Residential District.

1) Agriculture (inside platted subdivisions or subdivided areas - See Section 201.02);

2) Two family dwellings;

3) Private recreational areas and facilities such as swimming pools (See Section 1205.02), recreation clubs, summer camps;

4) Farm markets and roadside stands (See Section 607);

5) Use and structures that are customarily accessory to a principal use, on an individual lot without a principal use or structure;

6) Churches or Place of Religious Worship; and

7) Cemeteries.

603 MINIMUM YARD SETBACKS FOR PRINCIPAL STRUCTURES (see also Section 1202)
All principal structures shall meet the following yard requirements:

1) Front Yards: There shall be a minimum front yard depth of not less than fifty (50) feet from any State Highway, and not less than thirty-five (35) feet from any County or Township Road measured from the right-of-way line, or from the front lot line, whichever is furthest from the road's edge.

2) Side Yards: There shall be a minimum side yard of ten (10) feet.

3) Rear Yards: There shall be a minimum rear yard of twenty-five (25) feet.

604 MINIMUM SETBACKS FOR ACCESSORY STRUCTURES
All accessory structures shall meet the following yard requirements:

1) Accessory structures may not be located closer to a public right-of-way than the principal structure.

2) All accessory structures also shall not be located closer than 10 feet to any property line.

605 HEIGHT LIMITATIONS
No dwelling or other structure shall exceed thirty-five (35) feet in height.

606 MINIMUM LOT AREA AND MINIMUM LOT WIDTH
Lots less than five (5) acres must have a maximum of three (3) to one (1) lot depth to lot width ratio. The lot width shall be measured at the required front setback. Lots five (5) acres or more shall have a minimum lot width of fifty (50) feet. The required minimum lot size is dependant upon whether the lot is served by central water and/or sewer services. Lots that are not served by central water and sewer must have a minimum of (1) one acre of lot area. Lots served by sewer, but not water, must have a minimum of twelve thousand (12,000) square feet of lot area. Lots served by both sewer and water, must have a minimum of nine thousand (9,000) square feet of lot area.

607 FARM MARKETS
Farm markets and roadside stands may not be located in the public right-of-way and shall provide off-street parking in accordance with Chapter 14. All points of ingress or egress into parking areas may not be located within 50 feet of any intersecting street. All permanent, as well as temporary, structures are required to obtain a zoning permit in accordance with Section 1704.

608 PROHIBITED USES

1) Small wind turbines

CHAPTER 7
R-2 HIGH DENSITY RESIDENTIAL DISTRICT ZONING REGULATIONS

700 PURPOSE

The R-2 High Density Residential District is hereby created to provide suitable areas where residential development of a more high density urban nature may be developed. Such areas are required to be served with both central sewer and central water systems.

701 PRINCIPAL PERMITTED USE

The following use is permitted in the High Density Residential District:

1) Agriculture (Outside platted subdivisions or subdivided areas (see Section 201.02);

2) Two-family dwellings;

3) Multi-family dwellings;

4) Adult family home;

5) Congregate housing;

6) Golf courses;

7) Home occupations (see Section 1206);

8) Public or private schools;

9) Public uses;

10) Storm management ponds (see Section 1214);

11) Accessory use such as private garages, swimming pools (see Section 1205.01, and accessory structures such as storage sheds; and

12) Any other use deemed to be of a similar nature as those above by the Board of Zoning Appeals in accordance with Section 1902.

702 CONDITIONALLY PERMITTED USE

The following use may be approved by the Board of Zoning Appeals in accordance with Section 1902 in the High Density Residential District:

1) Agriculture (inside platted subdivisions or subdivided areas - See Section 201.02);

2) Child care facility;

3) Adult group home;

4) Private recreational areas and facilities such as swimming pools (See Section 1205.02), recreation clubs, summer camps;

5) Farm markets and roadside stands;

6) Use and structures that are customarily accessory to a principal use, on an individual lot without a principal use or structure;

7) Churches or Place of Religious Worship;

8) Cemeteries; and

9) Boarding or Rooming House.

703 MINIMUM YARD SETBACKS FOR PRINCIPAL STRUCTURES (see also Section 1202)
All principal structures shall meet the following yard requirements:

1) Front Yards: There shall be a minimum front yard depth of not less than fifty (50) feet from any State Highway, and not less than thirty-five (35) feet from any County or Township Road measured from the right-of-way line, or from the front lot line, whichever is furthest from the road's edge.

2) Side Yards: There shall be a minimum side yard of twenty (20) feet.

3) Rear Yards: There shall be a minimum rear yard of twenty-five (25) feet.

704 MINIMUM SETBACKS FOR ACCESSORY STRUCTURES
All accessory structures shall meet the following yard requirements:

1) Accessory structures may not be located closer to a public right-of-way than the principal structure.

2) All accessory structures also shall not be located closer than 10 feet to any property line.

705 HEIGHT LIMITATIONS
No dwelling or other structure shall exceed thirty-five (35) feet in height.

706 MAXIMUM DENSITY
Residential density may not exceed ten (10) dwelling units per acre of land. A central water and sewer system is required for residential development in this district.

707 PROHIBITED USES

1) Small wind turbines

CHAPTER 8
MANUFACTURED HOME PARK DISTRICT ZONING REGULATIONS

800 PURPOSE

The MHP manufactured home park district is hereby created to provide for the suitable location for manufactured home parks.

801 APPROVAL PROCEDURE

Manufactured home parks shall be located only in the MHP district and shall be developed according to the standards and regulations stated in this Chapter. The procedure to amend the Official Zoning Map to establish an MHP District is the procedure for amendments specified in Chapter 20.

802 GENERAL STANDARDS FOR MANUFACTURED HOME PARKS

The Zoning Commission and Board of Township Trustees shall review the particular facts and circumstances of each proposed manufactured home park development in terms of the following standards before amending the Official Zoning Map and establishing an MHP District:

1) The proposed park will be served adequately by essential pubic facilities and services such as highways, streets, drainage, refuse disposal, schools, police and fire protection, or that persons involved in the establishment of the park will provide such services adequately;

2) The vehicular approaches to the proposed park property will be so designed as not to create traffic interference or congestion on the surrounding public streets or roads;

3) The establishment of the proposed park will not result in the damage, destruction, or loss of any natural, scenic, or historic features of major importance;

4) The establishment of the proposed park will not be demonstrably detrimental to the value of the surrounding properties or the character of the adjacent neighborhood; and

5) The establishment of the proposed park is in general conformance with the master plan.

803 MANUFACTURED HOME PARK REQUIREMENTS

All manufactured home parks shall comply with the requirements of Ohio Administrative Code Chapter 3701 promulgated by the Ohio Public Health Council in accordance with Chapter 3733 of the Ohio Revised Code.

804 PROHIBITED USES

1) Small wind turbines

CHAPTER 9
C-1 GENERAL COMMERCIAL DISTRICT ZONING REGULATIONS

900 PURPOSES

The C-1 General Commercial District is hereby created to provide suitable areas where most forms of commercial development may occur in suitable locations along principal thoroughfares.

901 PRINCIPAL PERMITTED USES

The following uses are permitted in the C-1 District:

1) Agriculture;

2) Auto service stations and auto repair garages;

3) Bars and taverns;

4) Bed and breakfasts;

5) Billboard or Outdoor Advertising (See Section 1213);

6) Boat and recreational vehicle sales and storage;

7) Car wash;

8) Child care facility;

9) Convenience food stores;

10) Department stores;

11) Funeral home;

12) Furniture sales;

13) General retail of goods produced off the premises;

14) Hospitals or clinic;

15) Hotels and Motels;

16) Miniature golf and bowling alleys;

17) Private recreational areas and facilities such as swimming pools (See Section 1205.02), recreation clubs, summer camps;

18) Professional Offices;

19) Public uses;

20) Rental of goods or equipment;

21) Restaurant;

22) Specialty retail;

23) Self-service storage facilities;

24) Storm management ponds (see Section 1214);

25) Truck stops;

26) Veterinary Hospitals;

27) Accessory structures such as storage sheds; and

28) Any other use deemed to be of a similar nature as those above by the Board of Zoning Appeals in accordance with Section 1902.

902 CONDITIONALLY PERMITTED USE

The following uses may be approved by the Board of Zoning Appeals in accordance with Section 1904 in the C-1 District:

1) Lumber yards, and building material sales;

2) Food and agricultural products processing facilities;

3) Wholesale businesses or warehousing, when no processing, fabrication or assembly is involved, and when conducted totally within a building;

4) Storage of construction machinery and equipment; and

5) Cemeteries.

6) Adult Entertainment Businesses; and

7) Small Wind Turbines (See Section 1215)

903 **MINIMUM YARD SETBACKS FOR PRINCIPAL STRUCTURES** (See Also Section 1202)

All principal structures shall meet the following yard requirements:

1) Front Yards: There shall be a minimum front yard depth of not less than eighty (80) feet from any State Highway, and not less than fifty (50) feet from any county or township road measured from the right-of-way line, or from the front lot line, whichever is furthest from the road's edge.

2) Side Yards: There shall be a minimum side yard of fifteen (15) feet.

3) Rear Yards: There shall be a minimum rear yard of twenty-five (25) feet.

904 MINIMUM SETBACKS FOR ACCESSORY STRUCTURES

All accessory structures shall not be located closer than ten (10) feet to any property line.

905 HEIGHT LIMITATIONS

No structure shall exceed thirty-five (35) feet in height.

CHAPTER 10
I-1 GENERAL INDUSTRIAL DISTRICT ZONING REGULATIONS

1000 PURPOSE

This district is established to accommodate industrial use at appropriate locations within Duchouquet Township.

1001 PRINCIPAL PERMITTED USE

The following uses are permitted in the I-1 District:

1) Agriculture;

2) Assembly of small products, such as: cameras, clocks, jewelry, cutlery, kitchen utensils and toys; electrical appliances (lighting fixtures, irons, fans, toasters); electrical equipment such as home radios, televisions and movie equipment; small electrical supplies and electrical components; hand tools, dies, engineering, medical and musical instruments, and similar small steel products;

3) Billboards (See Section 1213);

4) Contractors' yards and storage facilities, provided however, that all equipment, tools and facilities shall be neatly arranged, stored or kept within a suitable building;

5) Manufacture, compounding, processing, packing or treatment of such products as candy, cosmetics, wood products, drugs, perfumes, pharmaceutical, toiletries, and food;

6) Manufacture of clothing, leather goods, athletic equipment;

7) Metal processing such as fabrication, stamping extrusion, welding, finishing, polishing;

8) Oil and Gas Drilling (See Section 1212);

9) Plastic molding and extrusion;

10) Public uses;

11) Research laboratories and offices;

12) Storm management ponds (see Section 1214);

13) Trucking terminal;

14) Warehouse and distribution;

15) Wholesale establishments; and

16) Any other use deemed to be of a similar nature as those above by the Board of Zoning Appeals in accordance with Section 1902.

1002 CONDITIONALLY PERMISSIBLE USE

The following use may be approved by the Board of Zoning Appeals in accordance with Section 1904 in the I-1 District:

1) Quarrying and mineral extraction, storage and processing (See Section 1207);

2) Production or storage of petroleum related products;

3) Commercial storage and distribution of LP gas; and

4) Sanitary landfills; and

5) Small Wind Turbines (See Section 1215)

1003 MINIMUM YARD SETBACKS FOR PRINCIPAL STRUCTURES (See Also Section 1202)

All principal structures shall meet the following yard requirements:

1) Front Yards: There shall be a minimum front yard depth of not less than eighty (80) feet.

2) Side Yards: There shall be a minimum side yard of fifteen (15) feet.

3) Rear Yards: There shall be a minimum rear yard of twenty-five (25) feet.

1004 MINIMUM SETBACKS FOR ACCESSORY STRUCTURES

All accessory structures shall not be located closer than ten (10) feet to any property line.

1005 HEIGHT LIMITATIONS

No structure shall exceed thirty-five (35) feet in height.

CHAPTER 11
PUD PLANNED UNIT DEVELOPMENT DISTRICT (PUD-RS, PUD-MX)

1100 PURPOSE

The Planned Unit Development District (PUD) is to achieve, to the greatest possible degree, land development that is responsive to the natural and environmental assets and liabilities of a given site. The PUD provides an alternative zoning category intended to encourage imaginative design of development. The PUD should be a well-integrated development in terms of major design elements such as roads, drainage systems, utilities, and open space. The PUD allows greater design flexibility so that natural features may be protected and development concentrated in an innovative and efficient manner.

1101 GENERAL REQUIREMENTS AND PUD DISTRICT DESIGNATION

Subsequent to the approval of the Township Trustees, the designation of PUD may be applied to any existing zoning district, with the limitations described herein. There are two types of PUD's. A PUD may be a predominantly residential development, and in which case is called a PUD-RS. A PUD-RS may only be applied to an existing residential district (R-1 and R-2). A PUD may also be a mixed use development, called a PUD-MX. A PUD-MX may be applied to any existing non-residential zoning district (C-1 and I-2). Upon the approval of the final development plan according to Section 1106, the Official Zoning Map shall be amended to designate the property "PUD-RS or PUD-MX." The tract of land proposed to be developed as a PUD MX must be owned, leased, or controlled by one person or single entity, and must be at least two contiguous acres in size. The tract of land proposed to be developed as a PUD RS must be owned, leased, or controlled by one person or single entity, and must be at least five contiguous acres in size.

1102 PERMITTED USES

The permitted uses in both the PUD-RS and PUD-MX district are as set forth below:

1102.01 Permitted Uses - PUD-RS

An applicant may propose to include any mixture of permitted or special uses in any existing residential district (R-1 and R-2), as well as land uses which are allowed as a permitted use in the C-1 district, provided that not more than 25 percent (25%) of the net acres in the development is devoted to non-residential uses.

1102.02 Permitted Uses - PUD-MX

An applicant may propose to include any mixture of non-residential land uses in a proposed PUD-MX development, provided that at least 60 percent (60%) of the net acres in the development are devoted to uses permitted in the district(s) applying to the property at the time of application.

1103 GENERAL DEVELOPMENT STANDARDS

The following standards represent broad parameters under which all PUD developments must be designed:

1103.01 Central Water and Sewer Facilities

All structures in developments approved as a PUD must be served by central or public water and sewer facilities.

1103.02 Development Layout and Design

The design and layout of all PUD's shall display excellence in design by properly considering significant site features, such as topography, natural drainage patterns, roadway access and circulation, surrounding land uses, and public welfare to result in desirable land development. Attractive landscaped buffers shall be provided between incompatible land use and activities.

1103.03 Front, Side, and Rear Setback Standards for Perimeter Lots

All lots that are located along the perimeter of the PUD shall have minimum front, side and rear setbacks equal to those that would normally be specified in the zoning district prevailing at the time of application for PUD approval or 25 feet, whichever is greater.

1103.04 Off-Street Parking and Loading Facilities

For all land uses located within the PUD, the parking and loading standards contained in Chapter 14 shall be applied.

1104 RESIDENTIAL (PUD-RS) DEVELOPMENT STANDARDS

In addition to the general development standards described in Section 1103 above, residential PUD's shall meet the following development standards:

1104.01 Clustering Residential Development and Required Open Space

Clustering residential density is encouraged to provide required common open space. A minimum of 20 percent (20%) of the land developed for residential purposes in a PUD project shall be reserved for common open space. This required amount of common space shall be established as common open space, under one ownership, and provisions shall be established for maintenance and care. The legal articles relating to any organization of property owners in the development charged with such open space maintenance shall be submitted to the Township. The Township Trustees may require as a condition of final approval, any evidence deemed necessary to document that the required common space will remain in its stated condition as long as the development exists (including such legal documents as deed restrictions, conservation easements, etc.).

1104.02 Clustering Residential Density

To achieve a clustering of residential density and to provide for the required common open space, the lot area requirements for residential land uses may be reduced from the densities required under the district(s) applying to the property at the time of application, by up to 20 percent (20%). The lot width and yard requirements for residential lots may be reduced as needed to accommodate a variety of structural patterns, clustering designs and housing types.

1104.03 Residential Dwelling Types

Along with clustering residential density, a PUD-RS may include a mixture of dwelling types, including, single-family detached dwellings, two-family units, zero lot line units, and multi-family units, provided the maximum densities defined in each existing zoning classification is not exceeded.

1105 GENERAL PUD APPROVAL PROCEDURE

The applicant for a PUD is encouraged to informally present conceptual or preliminary plans to both Township Trustees and the Zoning Commission for review, before extensive engineering and formal submission of a final development plan. Property proposed to be developed as a PUD must be rezoned to PUD, and the decision to approve a final development plan, and to rezone a property to PUD are done concurrently.

1106 FINAL PLAN

The applicant for a PUD shall submit ten (10) copies of the proposed Final Plan to the Zoning Inspector along with the required application fee. The final plan shall include:

1) The specific description of permitted, conditionally permitted and accessory uses to be allowed in each area of the development.

2) A copy of proposed deed restrictions.

3) An illustration of the following:

   a) A survey and legal description of the proposed development site, showing dimensions and bearings of the property lines; area in acres; topography (at two foot contour intervals); and existing features of the development site, including major wooded areas, streets, easements, utility lines, existing land uses;

   b) The location and dimensions of all lots, setbacks, and building envelopes;

   c) Conceptual drawings of sewer and water facilities as well as, street and drainage systems; and

   d) A table indicating acreage devoted to various development types.

4) Landscaping plan for all buffers and other common areas.

5) Architectural guidelines to apply throughout the development.

6) The proposed names of all interior streets proposed for the development.

7) Layout and dimensions of all parking and loading areas along with an indication of what they are to be built to serve.

8) A description of the expected timing of the development.

In addition to the above, the Township Trustees may require additional information, including environmental impact studies and archaeological surveys prepared by appropriate professionals to document the impacts of the development and to address potential mitigation measures. The applicant shall be responsible for reasonable expenses incurred by the Township in reviewing final development plans. Such expenses are beyond application fees established by the Township and may include professional service fees such as legal expenses, or fees from other professionals, such as engineers, landscape architects, planners, or environmental scientists incurred in connection with reviewing the plans submitted.

1107 FINAL PLAN AND REZONING APPROVAL PROCEDURE PROCESS

The decision to rezone land to PUD and to approve the final plan is accomplished concurrently. All PUD final plan submissions are deemed to be an application for amendment to the Zoning Code according to Chapter 20. All procedures (Zoning Commission Review, public hearings and action by the Trustees), therein shall be followed in considering an application for a rezoning of the land in question to PUD. Upon approval of such plan and rezoning, the Official Zoning District Map shall be amended to designate the project area as "PUD-RS or PUD-MX." Thereafter, with the concurrent approval of the rezoning and final plan pursuant to the criteria stated in Section 1108, all development

restrictions and conditions described in the final plan shall become official requirements of the PUD.

1108 CRITERIA OF APPROVAL - FINAL PLAN

The Zoning Commission and Trustees shall review the proposed Final Plan according to the following criteria:

1) That the proposed development is in conformity with the goals and objectives of the master plan;

2) That the proposed development advances the general health, safety and morals of Duchouquet Township;

3) That the interior road system, proposed parking, and any off-site improvements are suitable and adequate to carry anticipated traffic generated by and within the proposed development;

4) That any exception from standard district requirements can be warranted by design and other amenities incorporated in the final development plan, according to these PUD requirements;

5) That the area surrounding said development can be planned and zoned in coordination and substantial compatibility with the proposed development; and

6) That the existing and proposed utilities, including water and sewer service and drainage plan will be adequate for the population densities and non-residential uses proposed in the PUD.

1109 AMENDMENTS (CHANGES)

After the final development plan has been approved by the Township Trustees, adjustments or rearrangements of buildings, parking areas, entrances, heights, or yards may be requested by the proponents. Minor changes, as defined herein, are allowed, provided such requests conform to the standards established by the final development plan and this Resolution. A minor change shall require approval by the Zoning Commission and shall include the following.

1) Adjustments to the size and location of buildings, swimming pools, and other on site structures provided:

   a) They do not result in an increase in the number of housing units approved in the final plan;

   b) They do not encroach materially into the established setback areas; and

   c) They do not create a larger building mass either through an increase in their height or length that would magnify their effect on the adjoining areas.

2) Alterations to the proposed drives and/or parking areas if they do not encroach into building areas or specified recreation areas; and

3) Adjustments in the size and location of development identification signs.

A major change is any change that does not meet the criteria above and in addition, is one that would constitute a significant alteration in the basic plan design or result in a use different from those originally intended. A major change shall require submittal of a final plan as defined in Section 1106 of that portion of the development proposed to undergo a major change. The final plan may be approved by the Township Trustees following a recommendation from the Township Zoning Commission.

CHAPTER 12
SUPPLEMENTARY DISTRICT REGULATIONS

1200 GENERAL

The purpose of the supplementary district regulations is to set specific conditions for various uses, classification of use, or areas where problems are frequently encountered.

1201 TEMPORARY BUILDINGS

Temporary buildings, construction trailers, equipment, and materials used with construction work may only be permitted in any district during the period construction work is in progress. Such temporary facilities however shall be removed upon completion of the construction work. Storage of such facilities or equipment beyond the completion date of the project shall require a zoning permit authorized by the Zoning Inspector.

1202 SUPPLEMENTAL YARD REGULATIONS

In addition to all yard regulations specified in each zoning district, the following provisions shall be required in the indicated circumstances.

1202.01 Setback Requirements for Corner Buildings

On a corner lot, the principal building and its accessory structures shall be required to have the same setback distance from all street right-of-way lines as required for the front yard in the district in which such structures are located.

1202.02 Visibility at Intersections

On a corner lot in any district, nothing shall be erected, placed, planted, or allowed to grow in such a manner as to materially impede, or restrict vision, between a height of two and one-half (2-½) and ten (10) feet above the center line grades of the intersecting streets in the area bounded by the right-of-way lines of such corner lots and a line joining points along right-of-way lines fifty (50) feet from the point of intersection.

1202.03 Additional Yard Requirements for Buffering Purposes

To secure a desirable transition between land zoned for residential purposes (R-1 or R-2) and other zoning districts (C-1 through I-1) it is required that greater yard setbacks be provided on the property that is not zoned for residential purposed along the lot line(s) that abut land zoned for residential purposes. When property that is zoned C-1 through I-1 abuts property that is zoned R-1 or R-2, the yard requirements for that yard adjacent the residentially zoned property, shall be increased two (2) times over the normally required yard setback, up to a maximum of seventy-five (75) feet, and a landscaped buffer yard shall be provided in this area in accordance with Chapter 1301.

1203 SATELLITE DISH ANTENNAS

Freestanding satellite dish antennas (as defined herein), earth stations, or similar accessory structures shall not be constructed or placed on a property without a zoning permit, nor shall they be constructed in any required side yard or rear yard. Such satellite dish antennas or similar structures shall only be constructed to the rear of the residence or main structure, or placed on roofs of non-residential structures.

1204 FENCES

Fences shall meet the following requirements:

1) In all districts fences, plant material and similar screening devices (except those used for agricultural purposes), that are between the principal building and a street, and parallel to or nearly parallel to the front lot line and front wall of the principal building is permitted provided that height of such devices does not exceed forth-two (42) inches.

2) Fences within the General Commercial (C-1) or the General Industrial (I-1) districts that are no closer to the front lot line that the principal structure and parallel to or nearly parallel to a side lot line, screening devices shall be at least eight (8)feet in height and shall not exceed nine (9) feet in height. For fences that are behind a principal structure and parallel to or nearly parallel to a rear lot line, screening devices shall be at least eight (8) feet in height and shall not exceed nine (9) feet in height.

3) In all other districts fences that are no closer to the front lot line that the principal structure and parallel to or nearly parallel to a side lot line, screening devices shall not exceed six (6) feet in height. For fences that are behind a principal structure and parallel to or nearly parallel to a rear lot line, screening devices shall not exceed six (6) feet in height.

4) All fences must be setback two (2) feet from any property line unless neighbors agree otherwise. The neighbors' agreement shall be in writing and prior to the time of initial instillation or construction.

1205 OUTDOOR SWIMMING POOLS

Outdoor swimming pools are permitted as an accessory use and are regulated as follows:

1205.01 Private Swimming Pool

Private swimming pools are allowed as an accessory use in any district provided the following conditions and requirements are met:

1) The pool is intended and is to be used solely for the enjoyment of the occupants of the principal use of the property on which it is located and their guests;

2) It may not be located, including accessory structures adjacent thereto, closer than ten (10) feet to any property line of the property on which located; and

3) The swimming pool, or the entire property on which it is located, shall be so walled or fenced, in all zoning districts but A-1, to prevent uncontrolled access by children from the street or from adjacent properties. Said fence or wall shall be "non-climbable," not less than four (4) feet in height, and maintained in good condition, with a gate and lock.

1205.02 Community and Club Swimming Pools

Community and club swimming pools are permitted in as an accessory use, but shall comply with the following conditions and requirements:

1) The pool is intended solely for the enjoyment of the members and families and guests of members of the association or club under whose ownership or jurisdiction the pool is operated.

2) The pool and other accessory structures, including the areas used by bathers, shall not be closer than one-hundred (100) feet to any property line when such pools are

located within or next to land zoned R-1 or R-2. In all other cases, pools and other accessory structures, including the areas used by bathers shall not be closer than one hundred twenty-five (125) feet to any property line.

3) The swimming pool and all of the area used by the bathers shall be so walled or fenced as to prevent uncontrolled access by children from the street or adjacent properties.

1206 HOME OCCUPATIONS

Home occupations are an accessory use that is clearly subordinate to the use of a premise as a dwelling. Home occupations may include offices of professionals such as attorneys, physicians, engineers/architects, insurance agents, Realtors, or may include the production of small craft items. Further, home occupations must meet the following requirements:

1) No more than one (1) person is employed in the home occupation other than residents of the home.

2) The space devoted to the home occupation shall not exceed 25 percent (25%) of the total floor area of the residence, nor shall it occupy more than 25 percent (25%) of a private garage or similar accessory building.

3) There shall be no external evidence of the home occupation, except for a single non-illuminated sign in any R-1 or R-2 district. Home occupation signs shall be affixed to the residence or accessory building. In the A-1 district, home occupation signs may be free standing. All home occupation signs shall conform to the requirements of Section 1509.

4) No goods produced off the premises may be brought to the property and sold on the premises in any R-1 or R-2 zoning districts.

5) No external alterations, construction or reconstruction of the premises may be made to accommodate the home occupation.

6) No goods produced on the premises may be displayed outside an enclosed building.

1207 THE DEVELOPMENT OF LAKES AND MINERAL EXTRACTION

The following principals of acceptance, submission and design requirements shall apply to the development of lakes and mineral extraction activities. The development of lakes and mineral extraction is a Special Use. In addition to the procedures and requirements described in Chapter 12, the following principals and requirements shall also be used in the review of a proposed Lake or Mineral Extraction Special Use application.

1207.01 Principals of Acceptance

In reviewing the location and the development plan of a proposed lake or mineral extraction operation, the following general principals of acceptance shall be among those considered with respect to the particular location and the present and future development of the area:

1) The creation of a lake or mineral extraction operation shall not be detrimental to the surrounding area;

2) Potential flooding shall not be increased for surrounding properties because of elevating portions of the property under consideration;

3) The use and development of a proposed lake or mineral extraction operation and its adjacent area shall be properly planned to prevent ground water contamination; and

4) After completion, a lake or pit shall be properly maintained so that it will not become a danger and nuisance to area residents.

1207.02 Submission Requirements

In addition to other application requirements related to the review of a Special Use, the following additional submission materials shall be submitted at the time of application:

1) A topographical survey and soils report with soil boring of the property, prepared by a registered professional engineer or surveyor;

2) A site plan drawn to scale showing the location of the proposed lake or pit, final grades, location of any existing or proposed buildings, septic tanks, leach fields, wells, easements, ditches, and utility lines within five hundred (500) feet of the perimeter of the area;

3) Identification of the area of land to be affected corresponding to the application;

4) Location of haul roads on the property and proposed truck routes to the property;

5) A drainage plan illustrating drainage on, above, below and away from the area of land to be affected. This includes indicating the directional flow of water, constructed drainways, holding canals, natural waterways used for drainage, and the streams or tributaries receiving this discharge;

6) The percent of topsoil and excavated material to remain on a site to be used as fill; and

7) A reclamation plan of the area to be affected including a specific reuse of the property upon completion of the excavation.

1207.03 General Conditions

The lake or pit construction, mineral extraction operation standards and area requirements shall be conducted in accordance with the following conditions:

1) The lake or pit shall have a minimum surface area of five (5) acres and a maximum size of 20 percent (20%) of the property. The minimum property area is, therefore, twenty-five (25) acres;

2) The lake or pit shall have a one hundred (100) foot minimum setback from any road right-of-way centerline;

3) A lake or pit shall be located no closer than three hundred (300) to a septic tank or leach field or two hundred (200) feet to a well;

4) Within fifteen (15) feet of the shoreline, the average slope of the submerged areas of a lake shall be no steeper than three to one. From the shoreline away from the water, the grade shall be no steeper than four to one within twenty (20) feet of the shoreline;

5) In addition to meeting the Ohio Department of Natural Resources requirements, the Lake or Sand Pit shall be designed so to have a typical depth of at least eight (8) feet (except as provided in Item d above);

6) No materials shall be hauled to the property for use as fill, except for clean clay material that shall only be used to impact the lake banks;

7) An adequate amount of top soil shall be left on the site to establish and maintain vegetation;

8) In areas where sanitary sewers are not available, backfilling for any proposed housing site(s) as shown on the reclamation plan shall be distributed to elevate one (1) acre for each housing site to six (6) feet above the seasonal high water table. The topsoil on a proposed housing site shall be stripped and stored, then the area backfilled and compacted with the excavated material, the topsoil replaced over the backfilled area(s) and final grading completed;

9) All backfilling and excavated material distribution shall be certified in writing to the Township Zoning Inspector as conforming to the site grading plan and reclamation plan. Said written certification shall be by a registered engineer or surveyor and shall be submitted at the time of completion or in phases as required by the Township;

10) Any areas not backfilled must be drained with ditches, which must include culverts under all driveways to eliminate any standing water;

11) All haul roads shall be properly maintained to control dust, and shall have a gate to control ingress and egress;

12) The entire lake or pit and equipment storage area shall be completely fenced in before any excavation begins;

13) The hours of operations may be limited by the Township; and

14) In addition to any bonds required under the State of Ohio Surface Mine Law (ORC Chapter 1514), a bond of one thousand five-hundred dollars ($1,500) per acre shall be required with Duchouquet Township to guarantee satisfactory development and completion of a lake or pit. The entire project shall be bonded at once, and not bonded one acre at a time. All bonds shall be obtained before the start of any earthwork. Bonds shall be released by the Township following fulfillment of all conditions.

1208 PONDS

Ponds, may be located on a parcel of at least two and one-half (2.5) acres. All excavated material must be removed, unless used for landscaping, within sixty (60) days of the initial excavation and all excavation shall be carried out in conformance with Ohio Department of Natural Resources regulations. All ponds shall conform to applicable U.S. Soil Conservation Service specifications and may not be located within any required front yard or forty (40) feet of any lot line. The setback shall be measured from the point, which is the highest level the water can seek in the pond. If the high water mark on the pond is higher than the surrounding topography, then the setback shall be doubled.

1209 TEMPORARY USES

The following uses are deemed to be temporary uses and shall be subject to the specified regulations and time limits which follow, as well as the regulations of any district in which they are located:

1) Real estate sales offices, which shall contain no living accommodations, shall be permitted within any district for any new subdivision for one (1) year, except that extensions may be granted by the Board of Zoning Appeals if conditions warrant. Such offices shall be removed upon the completion of the sales of the lots therein, or upon the expiration of the zoning permit, whichever occurs first.

2) Temporary buildings, offices, and equipment and storage facilities required in conjunction with construction activity may be permitted within any district for one (1) year, except that six-month extensions may be granted by the Board of Zoning Appeals if construction is substantially underway. Such uses shall be removed immediately upon completion of the construction, or upon expiration of the zoning permit, whichever occurs first.

3) Outdoor temporary or seasonal sales and services may be permitted within paved areas within any commercial district. A zoning permit valid for a period not to exceed forty-five (45) consecutive days is required. No goods stored outside may be stacked, or otherwise placed to exceed a height of six (6) feet or create a traffic hazard. The area devoted to outside sales may not occupy more than twenty-five (25%) percent of the paved area or a lot.

1210 OUTDOOR STORAGE

Any outdoor storage of equipment, merchandise, goods, vehicles, or similar items shall be totally screened from any adjacent area zoned to permit residential land uses.

1211 YARD SALES

Any individual or family may conduct three (3) yard sales within any twelve (12) month period not to exceed three (3) consecutive days without obtaining a zoning permit. All other yard sales must be approved as a conditional use according to the requirements of Chapter 19.

1212 OIL AND NATURAL GAS DRILLING

Pursuant to ORC 519.21, the drilling of oil or natural gas, production activities, or the location of associated facilities or equipment, when such oil or natural gas obtained by an industrial firm is used for the operation of its own plants, are not regulated by this Resolution.

1213 OUTDOOR ADVERTISING

Where permitted in a zoning district, outdoor advertising such as billboards, outdoor advertising signs, or other free-standing outdoor advertising displays must meet the following requirements:

1) Outdoor advertising signs, structures, or billboards of any size shall not be located within 100 feet of any street or road right-of-way;

2) Outdoor advertising signs, structures, or billboards shall not be located within 1,500 feet of another outdoor advertising sign, display or structure; and

3) Outdoor advertising signs, structures, or billboards shall not be permitted within 500 feet of any building or other structure, and shall meet all side and rear setback requirements for a principal structure in the zoning district in which it is located;

4) Outdoor advertising shall comply with appropriate provisions of Section 5516 of the Ohio Revised Code.

1214 STORM MANAGEMENT PONDS: (RETENTION AND DETENTION PONDS)[1]

All storm management ponds shall meet the requirements and specifications of the Auglaize County Engineer.

1) Storm management ponds may be on multiple lots or on individual lots, and lot lines may pass through the storm management pond.

2) Fencing is optional in any district.

3) Storm management ponds shall be setback a minimum distance of twenty-five (25) feet from the outside perimeter of the district which the pond serves, and shall have fifteen (15) feet undisturbed from the original grade along the outside perimeter of the district.

4) The setback shall be measured from the highest point that the water can reach in the pond to the property lines. For the purposes of Section 1214 of the Duchouquet Township Zoning Resolution and the following drawing, "property line" is the boundary of the district served by the storm management pond.

5) Earth berms or disturbance from storm management ponds shall not exceed seven (7) feet in height form the original grade.

STORM MANAGEMENT POND CONSTRUCTION CONDITIONS

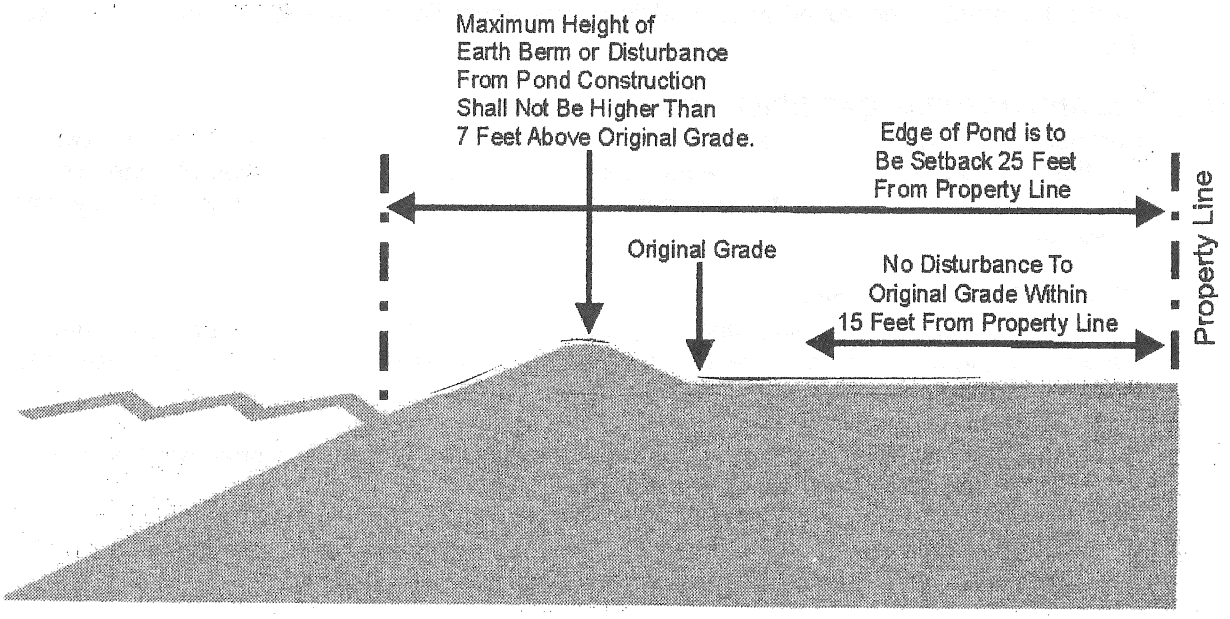

[1]Amendment Approved: December 6, 2005; Effective Date: January 5, 2006

1215 SMALL WIND TURBINES

General requirements for small wind turbines are as follows:

1) Small wind turbines and other wind powered generators, as defined in Section 121 5.01, are limited to a rated capacity of not more than 50kW.

2) Small wind turbines and other wind powered generators shall be allowed only on parcels of five (5) acre or greater in size.

3) Small wind turbines and other wind-powered generators powered by an electric generator shall service only one residential structure per parcel.

4) A small wind energy project, including tower, shall comply with all applicable state construction and electrical codes, and the National Electrical Code, and must be installed by personnel licensed by the State of Ohio to install small wind turbines.

5) The owner of a small wind turbine or other wind-powered generator must take reasonable steps to prevent and eliminate any interference with the transmission and reception of electromagnetic communications, including but not limited to: microwave, radio, telephone, cellular, and television signals.

6) Small wind turbine or other wind-powered generators must be on a freestanding tower or other approved reinforced structure. The use of additional supports including guy wires is prohibited.

7) The applicant shall provide proof of notification to adjacent property owners as required by the Ohio Revised Code Section 519.211 (telecommunications towers) and shall conform to Ohio Revised Code Section 519.213.

8) A minimum distance between the ground and any protruding blades is 15 feet as measured at the lowest point of the arc of the blades to a point no lower than the average grade in and around the immediate tower area.

9) The proposed small wind turbine and other wind-powered generator shall maintain a clear fall zone of no less that 125% of the total height of the structure from any property line, current or future structure, and public or private road right-of-way.

10) On parcels zoned to permit residences, the size of a small wind turbine and other wind-powered generator structures are subject t to the following size limitations. Subject sites with contiguous parcels identical ownership may be considered as one larger parcel. In determining the height, grade shall be determined by averaging the area around the proposed location of the small wind turbine and other wind-powered generator:

a) Parcels in A-1 district shall be subject to the following conditions:

Parcel Size	Maximum Tower Height	Maximum Generator
5 to 9.9 acres	80 feet	20kW
10 to 14.9 acres	100 feet	25kW
15 acres or more	125 feet	50kW

b) Parcels in the C-1 or 1-1 districts shall be subject to the following conditions:

Parcel Size	Maximum Tower Height	Maximum Generator
5 acres or more	125feet	50kW

11) Small Wind Turbines are prohibited in the R-1 and R-2 districts.

12) Residential, commercial or industrial roof top and or combination units (utility lights with generators etc.) are prohibited.

13) All wind turbine towers shall be enclosed with a six (6) foot high non-climbable and locked fence, unless the base of the tower is not climbable for a distance of twelve (12) feet from the lowest point.

14) All upgrades, modifications, or improvements of any kind to an approved small wind turbine shall be reviewed by township zoning inspector for compliance with the provisions of this section. Only modifications that adhere to the provisions contained herein shall be allowed.

15) No other use of the tower shall be permitted. This includes but is not limited to placement of signage, radio or cellular antennas or any other use not provided for at the time of approval. All signs, other than manufacturer or installer identification and other legally required signage are hereby prohibited.

16) Small wind turbines shall either be the stock color from the manufacturer or painted with an approved non-reflective, unobtrusive color that blends with the surrounding environment.

17) Abandoned small wind turbines shall be completely dismantled and removed from the property within six (6) months of its last use in producing electricity. Wind Turbines taken out of service for indefinite but temporary reasons shall provide the township with proof of proper maintenance. Wind Turbines without proper maintenance shall be considered abandoned by the township.

1216 DEFINITIONS FOR SMALL WIND TURBINES

Clear Fall Zone: the area, defined as the furthest distance from the tower base, in which a tower will fall in the event of a structural failure. Said measurement is to be based on the total height of the Wind Turbine.

Decibel (dBA): A unit of relative loudness.

Electrical generator: a device that produces electrical energy from a mechanical energy source. The process is known as electricity generation.

Feeder line: any power line that carries electrical power from one or more wind turbines or individual transformers associated with an individual wind tower.

Kilowatt (kW): a measurement of electricity, equal to 1,000 watts.

Net Metering: The process by which surplus energy generated by a customer, as measured by the difference between the electricity supplied by an electric service provider and the electricity generated by a customer in an applicable billing period, is fed back to the electric service provider with customer compensation.

Rotor Diameter: The diameter of the circle described by the moving rotor blades.

Shadow Flicker: Shadow flicker occurs when the blades of the turbine rotor cast shadows that move across the ground and nearby structures.

Small wind turbines and other wind powered generators: Is an electrical generating devise which is installed on top of a tower or tall structure for the sole purpose of collecting kinetic (motion) energy from natural wind movement and convert the energy to electricity. Typical uses include a turbine rotary engine in which the kinetic energy is converted into mechanical energy by causing a bladed rotor to rotate.

Wind Turbine Total height: the highest point, above ground level, reached by a rotor tip.

Wind Turbine Tower: the vertical structures that support an electrical generator, rotor blades, or meteorological equipment.

CHAPTER 13
LANDSCAPING REQUIREMENTS

1300 GENERAL

Consistent with the objectives established in this Chapter and requirements in specific zoning districts, landscaping shall be provided in the following areas:

1) At the perimeter of sites to buffer, separate and/or screen adjacent land uses;

2) At the perimeter of parking lots to shade, separate and/or screen the view of parked cars from adjacent streets and adjacent land uses;

3) In the interior of parking lots to shade and beautify the paved surface; and

4) Around the perimeter of buildings to soften, shade and enhance the appearance of structures.

1301 BUFFER YARDS

The buffer yard is a designated unit of yard, with any plant materials, barriers, or fences located thereon designed to lessen impacts between adjoining dissimilar land uses. By using both distance and landscaping, the impact of such items as noise, glare, activity, dirt, and unsightly parking areas will be reduced. It is a further intent of the following provisions to provide, within general guidelines, flexibility to the property owner through the use of plant material type, plant material density, and structural or land forms to achieve an adequate buffer. When barriers or fences are utilized, plant material shall be included.

1301.01 Location of Buffer Yards

Buffer yards shall be located on the side and rear lot lines of a parcel extending to the lot or parcel boundary line. Buffer yards shall not extend into or be located within any portion of an existing street right-of-way.

1301.02 Design of Buffer Yards

Existing plant material, earth berms, fences, hedges or similar decorative landscape elements may be used to contribute to the total buffer yard requirements. The buffer yards specified are to be provided so that the installed landscape materials, berm, or structural elements provide a minimum of seventy-five (75) percent winter opacity and one-hundred (100) percent summer opacity to a height of six (6) feet above the finished grade level. This degree of screening must be provided within two (2) years of planting and the inclusion of trees is encouraged.

1302 SCREENING OF SERVICE COURTS, STORAGE AREAS AND LOADING DOCKS

For all uses that include areas used for service, loading, and unloading activities, such areas shall be screened along the entire rear lot line and side lot lines from the rear lot line to the rear building line. Screening shall consist of walls, hedges, fences, natural vegetation, or an acceptable combination of these elements, provided that screening must be at least seven (7) feet in height. Natural vegetation used for screening shall be at least five (5) feet in width have a minimum opaqueness of seventy-five (75) percent at all times within two (2) years of planting.

1303 SCREENING OF TRASH CONTAINER RECEPTACLES

All trash containers or receptacles in C-1 and I-1 zones shall be located at least ten (10) feet from a property line and shall be screened or enclosed. Trash containers designed to service more than one residential unit or to service a non-residential structure shall be screened on a minimum of three (3) sides by walls, fences, or vegetation or an acceptable combination of these elements. Trash containers shall not be located in the front yard building setback. The height of such screening shall be at least six (6) feet. The maximum height of walls and fences shall not exceed ten (10) feet. Vegetation shall have a minimum opaqueness of seventy-five (75) percent at all times within two years of planting. The use of evergreen vegetation is encouraged. Vegetation shall be a variety that will attain six feet in height within two (2) years of planting.

1304 INTERIOR PARKING AREA LANDSCAPING

Landscaping within parking areas, whether ground cover or upright plant material, is necessary not only to reduce the generation of heat and water runoff, but to break up visually the expanse of paved areas. The use of parking islands or peninsulas strategically placed throughout the parking lot is required to landscape parking lot interiors. The use of shade trees in these landscape areas is required. Any open parking area (including loading areas) containing more than twelve thousand (12,000) square feet of area or thirty (30) or more parking spaces shall provide the following interior landscaping:

1) An area equal to five percent (5%) of the total area devoted to parking spaces and interior lanes shall be landscaped and permeable.

2) The required landscaping shall be designed to break up the visual expanse and create the appearance of parking lots. The required landscaping may be incorporated into the parking area design to provide landscape features such as boulevards, larger landscape islands, or areas of preserved on-site native vegetation. This landscaping requirement may also include stormwater retention areas or drainage courses, if designed to provide an attractive natural asset to the site.

1305 PLANT MATERIAL SPECIFICATIONS (FOR BUFFER YARDS, LANDSCAPING, LANDSCAPE SETBACK AND SCREENING)

The following sections include specifications for plant materials. Alternatives to these materials that can be shown to meet both the intent and requirements of this Resolution may be approved as part of a Site Plan:

1) Deciduous Trees- Size at planting: A minimum caliper of at least two and one-half (2.5) inches measured twelve (12) inches above ground level.

2) Evergreen Trees- Size at planting: A minimum of six (6) feet high and a minimum spread of three (3) feet.

3) Shrubs: Shrubs shall be at least thirty (30) inches average height and twenty-four (24) inches width at the time of planting.

4) Ground cover and Grass: Ground cover shall be planted a minimum of eight inches on center and shall be planted in such a manner to present a finished appearance and seventy-five (75%) coverage after one complete growing season. If approved as part of a Site Plan, ground cover may also consist of rocks, pebbles, shredded bark mulch and other material. Grass shall be planted in species normally grown as permanent lawns.

5) Prohibited Tree Species: Within any required landscaping, the following tree species may not be used:

a) Black Locust
b) Black Walnut
c) Box Elder
d) Catalpa
e) Hickory
f) Mountain Ash
g) Mulberry
h) Poplar
i) Siberian Elm
j) Silver Maple
k) Tree of Heaven
l) Willow

1306 MAINTENANCE AND REPLACEMENT REQUIREMENTS

The owner shall be responsible for the maintenance of all landscaping in good condition to present a healthy, neat and orderly appearance.

CHAPTER 14
PARKING AND LOADING REQUIREMENTS

1400 GENERAL PARKING REQUIREMENTS

In all districts at any time any building, structure or use of land is erected, enlarged, increased in capacity, or used, there shall be provided for every use off-street parking spaces for automobiles in accordance with the provisions of this Chapter.

1401 OFF-STREET PARKING DESIGN STANDARDS

All off-street parking facilities including entrances, exits, maneuvering areas, and parking spaces shall be in accordance with the following standards and specifications:

1401.01 Parking Space Dimensions

A parking space shall have minimum rectangular dimensions of not less than ten (10) feet in width and nineteen (19) feet in length for ninety (90) degree parking, ten (10) feet in width and twenty-three (23) feet in length for parallel parking, ten (10) feet in width and nineteen(19) feet in length for sixty (60) degree parking, and twelve (12) feet in width and nineteen (19) feet in length for forty-five (45) degree parking. All dimensions shall be exclusive of driveways, aisles, and other circulation areas.

1401.02 Access

There shall be adequate provision for ingress and egress to all uses. For single or two family residential dwellings, driveways shall be a minimum of nine (9) feet in width. For all other uses, driveways shall be a minimum width of twenty-two (22) feet and may be located on more than one property. If loop drives are approved as part of the site plan review process, the width of an individual drive shall be at least eleven (11) feet.

1401.03 Setbacks

Off-street parking areas may not be located closer than five (5) feet from any side or rear property line.

1401.04 Interior Landscaping

All parking areas shall be landscaped in accordance with Chapter 13.

1401.05 Paving

Except as provided in Section 1408 and for residential lots more than one (1) acre, required off-street parking spaces, with driveways, aisles, and other circulation areas, shall be surfaced before granting of a use permit (Section 1703). Surfacing shall be accomplished with an asphaltic or Portland cement binder pavement to provide a durable or dust-free surface and perimeters of parking areas shall be curbed or have other suitable barriers.

1401.06 Drainage

All parking spaces, together with driveways, aisles, and other circulation areas shall be graded and drained to dispose of surface water that might accumulate within or upon such area, and shall be designed to prevent the excess drainage of surface water onto adjacent properties, walkways, or onto the public streets. Adequate arrangements shall be made to insure an acceptable diversion to an adequate storm water drainage system.

1401.07 Visibility
Access of driveways for parking areas shall be located so that any vehicle entering or leaving such parking area shall be clearly visible for a reasonable distance by any pedestrian or motorist approaching the access or driveway from a public or private road or alley.

1401.08 Marking
All parking areas for five (5) or more spaces shall be marked with paint lines, curbs, or in another manner approved by the Zoning Inspector, and shall be maintained in a clearly visible condition.

1401.09 Maintenance
Any owner of property used for parking areas shall maintain such areas in good condition without holes and free of all dust, trash, or other debris.

1401.10 Signs
Where necessary due to multiple curb cuts, the entrances, exits, and the intended circulation pattern of the parking area shall be clearly marked.

1402 DETERMINATION OF REQUIRED SPACES
In computing the number of parking spaces required by this Resolution, the following rules shall apply:

1) Where floor area is designated as the standard for determining parking space requirements, floor area shall be the sum of the gross horizontal area of all the floors of a non-residential building measured from the faces of the exterior walls, unless otherwise noted;

2) Where seating capacity is the standard for determining parking space requirements, the capacity shall mean the number of seating units installed or indicated or each eighteen (18) lineal inches of benches, or pews, except where occupancy standards are set by the fire marshal;

3) Fractional numbers shall be increased to the next whole number; and

4) The parking space requirements for a use not specifically specified in this Resolution shall be the parking requirements for the use that is most closely similar.

1403 OFF-STREET STORAGE AREAS FOR DRIVE-IN SERVICES
Establishments that by their nature create lines of customers waiting to be served within automobiles shall provide off-street stacking areas in accordance with the following requirements:

1) Photo pickups, restaurants, drive-thru beverage docks, and other similar commercial establishments that can normally serve customers in three minutes or less shall provide no less than five (5) storage spaces per window. Drive-in restaurants and other similar uses that require an additional stopping point for ordering shall provide a minimum of three (3) additional stacking spaces for each such stopping point.

2) Other commercial establishments such as banks, savings and loan offices, or other similar facilities with service or money windows shall provide no less than four (4) stacking spaces per window.

3) Self-serve automobile washing facilities shall provide no less than three (3) stacking spaces per stall. All other automobiles washing facilities shall provide a minimum of six (6) stacking spaces per entrance.

4) Motor vehicle service stations shall provide no less than two (2) stacking spaces for each accessible side of a gasoline pump island. Gasoline pumps shall not be located closer than fifteen (15) feet to any street right-of-way line.

1404 PARKING OF DISABLED VEHICLES

The parking of a disabled vehicle within a residential district for more than one week shall be prohibited, except that such vehicle may be stored in an enclosed garage or other accessory building, provided that no business shall be conducted in connection therewith while such vehicle is parked or stored.

1405 PARKING SPACE REQUIREMENTS

For the purposes of this Resolution, the following parking space requirements shall apply. Designated parking spaces for the handicapped may be included in the computation of required spaces.

1405.01 Residential Uses

1) ***Single-family or two-family dwelling:***	Two per dwelling unit.
2) ***Multi-family with three or more dwelling units:***	One and one half per dwelling unit.
3) ***Multi-family with three or more dwelling units designated exclusively for occupancy by the elderly or handicapped (including congregate housing:***	One-half per handicap or elderly dwelling unit; plus an area on the site reserved for future parking to accommodate one parking space per dwelling unit.
4) ***Rooming or boarding house:***	One for each two sleeping rooms.

1145.02 Commercial Uses

1) ***Amusement arcade:***	One for each one hundred square feet of gross floor area.
2) ***Auditorium, stadium, theater, conference center, or large place of assembly:***	One for each thirty square feet of gross floor area of the auditorium or assembly space.
3) ***Automobile car wash, automatic:***	Two per site in addition to ten stacking spaces. A washing space is not a parking space.

4) ***Automobile car wash, self service:***	Two per site in addition to four stacking spaces per bay. A washing space is not a parking space.
5) ***Automobile repair garage:***	Two per service bay. A service bay is not a parking space.
6) ***Automobile sales:***	One for each 5,000 square feet of developed lot area used for vehicle display and one for each 300 square feet of gross floor area.
7) ***Automobile service station which sells oil and gas only:***	Two per automobile service station. A pumping space is not a parking space.
8) ***Automobile service station which sells gas and provides lubrication, oil changes and repairs:***	Two per service station plus two per service bay. A service bay or pumping area is not a parking space.
9) ***Bank or financial institution:***	One for every 300 square feet of floor area.
10) ***Barber and beauty shop:***	One for every 200 square feet of gross floor area.
11) ***Bowling alley:***	Five per alley or lane.
12) ***Fitness or reducing salon:***	One for every 300 square feet of gross floor area.
13) ***Funeral parlor and mortuary:***	One for every 150 square feet of gross floor area.
14) ***Furniture store:***	Two plus one for every 300 square feet of gross floor area over 1,000.
15) ***General office:***	One for each 300 square feet of gross floor area.
16) ***Golf course:***	Six for each hole.
17) ***Hotel or motel:***	One per guest room, plus the required number of spaces for additional uses on the site.
18) ***Junkyard:***	One space per acre.
19) ***Medical or dental office or clinic:***	One for each 200 square feet of gross floor area.

20) ***Meeting or reception hall:***	One for each 200 square feet of gross floor area.
21) ***Outdoor recreation:***	One for each three employees, plus one for each 500 feet of use area.
22) ***Self-Service Storage Facility:***	Four plus one space per employee.
23) ***Shopping Center and Freestanding Retail:***	4 for each 1,000 square feet of leasable area.
24) ***Restaurant, tavern or dining room:***	One for each 75 square feet of gross floor area.
25) ***Skating rink or dance hall:***	One for each 100 square feet of gross floor area.
26) ***Swimming pool, indoor or natatorium:***	One for each fifty square feet of water surface area; plus one for each thirty square feet of gross floor area for spectator seating purposes.
27) ***Swimming pool, outdoor:***	One for each fifty square feet of water surface area; plus one for each thirty square feet of gross floor area for spectator seating purposes.
28) ***Tennis or racquetball:***	Two per court.
29) ***Any other type of business or commercial use in a commercial district or other permitted district:***	One for each 250 square feet of gross floor area.

1145.03 Institutional Uses

1) ***Church or place of religious worship:***	One for each forty square feet of gross seating area of the sanctuary, auditorium or main place of worship.
2) ***Club or lodge:***	One for each five active members.
3) ***Elementary school (K-9):***	Two per classroom and one for each sixty square feet of gross floor area in the auditorium or assembly hall.
4) ***High school, business, technical or trade school, college or university:***	Two per class- room and one for every ten students for which the facility is designed; or one for each sixty square feet of gross floor area in the auditorium or assembly hall, whichever is greater.

5) ***Hospital:***	One space per every four beds, plus one and one-half space per emergency room beds.
6) ***Library, museum or art gallery:***	Ten plus one for each 300 square feet of gross floor area in excess of 2000 square feet.
7) ***Sanitarium, nursing home, children's home or mental health hospital:***	One per two beds for the first 100 beds and one space for each two and one half beds for all beds in excess of 100.

1405.04 Industrial Uses

1) ***Warehouse (excluding Self-Service Storage Facilities):***	One per one and one-half employee.
2) ***Wholesale / Distribution (not including membership wholesale establishments):***	One space per one thousand square feet gross floor area for the first ten thousand square feet, plus one per two thousand square feet gross floor area for the remaining space, plus one space for each vehicle used in the conduct of the business. Office area parking shall be calculated separately based on office parking rates.
3) ***Manufacturing, Utility, Research and Development Facilities:***	One per one and one-half employee.

1406 HANDICAPPED PARKING

Parking facilities serving buildings and facilities required to be accessible to the physically handicapped shall have conveniently located designated spaces provided as follows:

Total Spaces in Lot/Structure	Number of Designated Accessible Spaces
Up to 100	One space per 25 parking spaces
101 to 200	4 spaces, plus one per 50 spaces over 100
201 to 500	4 spaces, plus one per 75 spaces over 200
501 to 1000	2 percent of total spaces
1001 and over	20 plus 1 for each 100 over 1000

One in every eight (8) accessible spaces, but not less than one, shall be served by an access aisle at least ninety-six (96) inches wide and shall be designated van accessible.

1407 CONGREGATE HOUSING PARKING

Each parking space provided for occupants of a congregate housing facility shall, as a minimum measure, ten (10) feet in width and twenty (20) feet in length, with aisles measuring a minimum of twenty-four (24) feet in width.

1408 OFF-STREET LOADING SPACE REQUIREMENTS

In any district, in connection with every building or part thereof hereafter erected and having a gross floor area of three thousand (3,000) square feet or more, which is to be occupied by manufacturing, storage, warehouse, goods display, retail store, wholesale store, hotel, hospital, mortuary, laundry, dry cleaning, or other uses similarly requiring the receipt or distribution by vehicles of material or merchandise, there shall be provided and maintained, on the same lot with the building, at least one off-street loading space, and one additional loading space. For each ten thousand (10,000) square feet or fraction thereof of gross floor area in excess of three thousand (3,000) square feet, an additional loading space(s) shall be provided.

1409 OFF-STREET LOADING DESIGN STANDARDS

All off-street loading spaces shall be in accordance with the following standards and specifications:

1409.01 Loading Space Dimensions

Each loading space shall have minimum dimensions not less than twelve (12) feet in width, sixty-five (65) feet in length, and a vertical clearance of not less than fourteen (14) feet.

1409.02 Setbacks

No part of any loading space shall be permitted closer than fifty (50) feet to any Residential District or closer than five (5) feet from any public right-of-way.

1409.03 Screening

Off street loading areas shall be screened in accordance with Section 1302

1409.04 Access

All required off-street loading spaces shall have access from a public street or alley so that any vehicle leaving the premises shall be traveling in a forward motion.

1409.05 Paving

All required off-street loading spaces, within two hundred (200) feet of any Residential District, together with driveways, aisles, and other circulation areas, shall be surfaced before granting of the occupancy permit, with an asphaltic or Portland cement binder pavement to provide a durable or dust free surface.

1409.06 Drainage

All loading spaces, together with driveways, aisles, and other circulation areas, shall be designed to prevent the excess drainage of surface water onto adjacent properties, walkways or onto the public streets. Arrangements shall be made to insure an acceptable diversion to an adequate storm water drainage system.

1409.07 Lighting

Any lights used to illuminate a loading area shall be so arranged as to reflect the light away from adjoining property.

1410 PARKING RESTRICTIONS FOR R-1 AND R-2 DISTRICTS

1410.01 No inoperable motor vehicle, no trailer, motor home, camper, recreational vehicle shall be parked on or located within the setbacks of any lot of such district for a continuous period of forty-eight (48) hours.

1410.02 No inoperable motor vehicle, no trailer, motor home, camper, recreational vehicle, boat, aircraft, nor any truck shall be parked on any street for more than seventy-two (72) continuous hours during any thirty (30) day period.

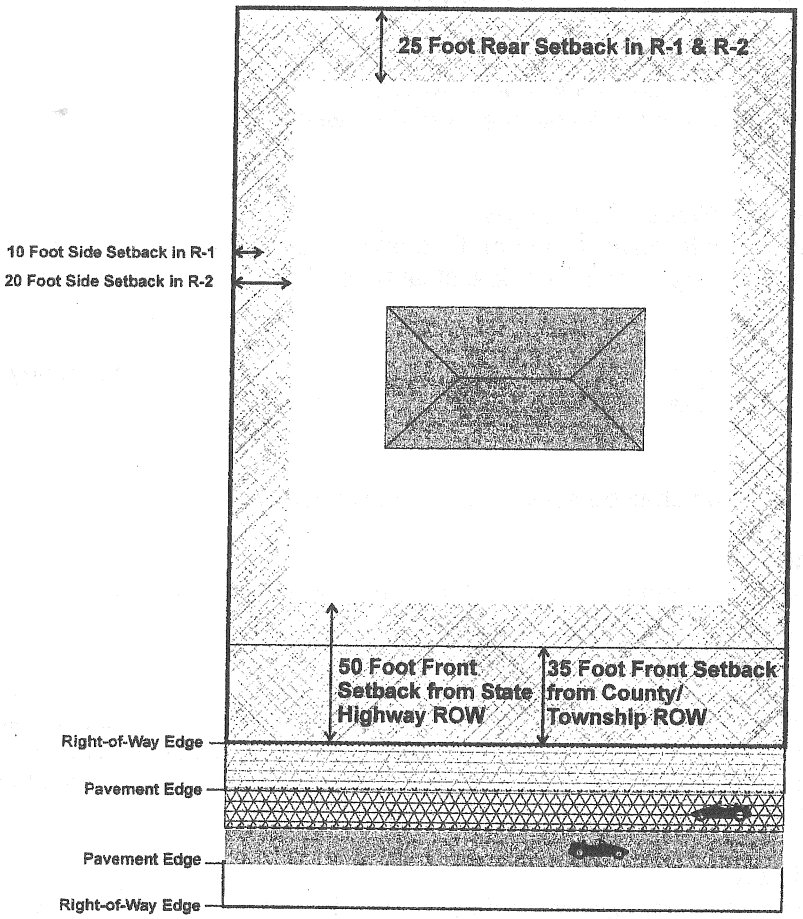

CHAPTER 15
SIGNS

1500 STATEMENT OF PURPOSE

The purpose of this Chapter is to create the legal framework for a comprehensive but balanced system of street signage, and thereby to facilitate safe and effective identification and communication between people and their environment. With this purpose in mind, it is the intention of this Resolution to authorize the use of signage that is:

1) Compatible with the surroundings;

2) Appropriate to the type of activity to which it pertains;

3) Expressive of the identity of individual proprietors and of the community as a whole; and

4) Legible in the circumstances in which it is seen.

1501 PERMITS AND FEES

No person shall erect, alter, relocate or maintain within the Township any sign or other advertising structure except those exempted in Section 1502 hereof without first obtaining a sign permit from the Zoning Inspector.

1501.01 Application for Permit

Application for sign permits shall be made upon forms provided by the Zoning Inspector and shall require information deemed necessary for the enforcement of this Resolution.

1501.02 Permit Fees

Every applicant, before being granted a sign permit, shall pay to the Township a permit fee in an amount consistent with a resolution passed by The Township Trustees.

1501.03 Authority to Revoke

The Zoning Inspector is hereby authorized to revoke any permit issued by him upon failure of the holder thereof to comply with any provisions of this Chapter.

1502 PERMIT EXEMPTIONS

The permit provisions of this Section shall not apply to the following signs:

1) Non-illuminated real estate signs not exceeding six (6) square feet in sign area that advertise the sale, rental or lease of the premises upon which such signs are located;

2) Non-illuminated signs not exceeding thirty-two (32) square feet in sign area which advertise the sale or development of subdivision or undeveloped acreage;

3) Nameplates attached to a building, not exceeding two square feet in area, containing only the name of the residents, the title of the person practicing a profession, the name of the building or property, the name of the agent and the hours and days of operation;

4) Signs with changeable copy not exceeding eighteen (18) square feet in area erected upon the premises of a place of worship, funeral home or public institution for displaying the name of the institution and its activities or services;

5) Traffic control signs on private property, containing no commercial message, necessary to direct traffic flow;

6) Signs denoting the architect, engineer or contractor when placed upon work under construction, and not exceeding twelve (12) square feet in area;

7) Memorial signs or tablets, name of buildings and dates of erection, provided that such signs do not exceed two square feet in area;

8) Traffic or other public signs, legal notices, railroad crossing signs, danger and, emergency signs;

9) Interior signs that are not in the window showcase;

10) Temporary signs, excluding political signs, not to exceed thirty (30) days in one calendar year;

11) Temporary window signs (not to exceed 30 days) such as "Sale," "Special," "Clearance," or symbolic or graphic sings, such as a red heart for Valentine's Day, or Christmas decorations, or the like, may be erected indoors or out-of-doors, without a permit;

12) Political signs that comply with the requirements of Section 1513.05;

13) Seasonal or holiday sign; and

14) Agricultural Signs.

1503 CONSTRUCTION

All signs, canopies, attachments and accessories shall be attached and constructed in a safe, secure manner, free of any hazards and it shall be the responsibility of the owners and/or contractor to construct and maintain all signs as required by the applicable Building Code.

1504 WALL SIGNS

Wall signs shall be permitted subject to Section 1511 and subject to the following limitations and requirements:

1504.01 Projection from Building

No wall sign shall project beyond the ends or top of the building wall to which it is attached, nor be set out more than one foot from the face of the building to which it is attached.

1504.02 Lighting

Lighting shall be permitted on wall signs, provided that illumination is concentrated upon the area of the sign to prevent glare upon the street or adjacent property.

1505 PROJECTING SIGNS

Projecting signs shall be permitted in non-residential districts subject to Section 1511 and the following limitations and requirements:

1505.01 Lighting

Lighting shall be permitted on projecting signs, provided that illumination is concentrated upon the area of the sign to prevent glare upon the street or adjacent property.

1506 FREESTANDING SIGNS

Except as provided herein, no lot may have more than one free standing sign.

1506.01 Freestanding Signs on Corner Lots

If a development is located on a corner lot that has at least one-hundred (100) feet of frontage on each of the two intersecting public streets, then the development may have up to one freestanding sign along each side of the development bordered by such public streets.

1506.02 Freestanding Signs on Double Frontage Lots

If a development is located on a lot bordered by two public streets that do not intersect at the lot's boundaries (double front lot), then the development may (subject to total sign area limitations in Section 1512) have a freestanding sign on each public street.

1506.03 Location and Height of Freestanding Signs

Except as provided in Section 1509 below, all freestanding signs shall be located at least five (5) feet from the right-of-way line, and may not exceed a height of twenty (20) feet in C-1 Districts and twelve (12) feet in all other districts.

1507 HIGHWAY SIGNS

Highway signs for commercial businesses located within 500 feet of an intersection on an interstate highway may not exceed sixty (60) feet in height with a maximum sign area of 120 square feet per face.

1508 AWNINGS AND CANOPIES

Awnings shall be constructed of cloth or textile fabric. Every awning shall be securely attached to and supported by the building. No advertising shall be placed on any awning or canopy, except the name of the owner and the business, industry, logo or pursuit conducted within the premises. Any sign space used on an awning or canopy shall be considered as part of the total permitted signage for a building or structure.

1509 SIGNS IN AGRICULTURAL OR RESIDENTIAL DISTRICTS

The following regulations shall apply to signs in the agricultural and residential districts:

1) Garage sale signs are permitted provided that no such sign is larger than five (5) square feet in area. No permit is required for garage sale signs.

2) Non-illuminated signs related to an approved home occupation are allowed, provided that such signs are limited to one (1) per structure, and that such signs are not more than six (6) square feet in area, and are affixed to the dwelling, or accessory structure. In addition, if the home occupation is located within an agricultural district, a two-sided sign, meeting the above guidelines, is allowed within the required front yard (not within the right-of-way).

3) At any entrance to a residential subdivision or multi-family development there may be not more than two signs identifying such subdivision or development. The total sign area of a single sign at a single entrance shall not exceed 50 square feet. Any subdivision entrance/identification sign proposed to be located within the center of a

boulevard entrance shall be located in a manner so as not to create a traffic hazard from the standpoint of adequate sight distances and must be approved by the Township Trustees.

4) All free standing signs shall be set back at least fifteen (15) feet from the right-of-way and any property line.

5) The maximum size of any sign shall not exceed 50 square feet, unless a smaller size is set forth above.

1510 SIGNS PROHIBITED

The following signs are prohibited in all districts in Duchouquet Township.

1510.01 Animated Signs

No flashing, moving or mechanically-animated signs shall be erected or constructed or maintained in Duchouquet Township.

1510.02 Roof Signs

No roof signs shall be erected or constructed in Duchouquet Township.

1510.03 Portable Signs

Trailer mounted mobile signs are prohibited in any zoning district in Duchouquet Township. These signs are mounted on a trailer, and typically have flashing lights and an interior light source which illuminates an area upon which letters and/or numbers are affixed. Additionally, any sign which is illuminated by a light source which flashes, rotates, or otherwise moves are prohibited, as are any signs which, because of glare or reflection, are found to cause a traffic hazard or nuisance.

1511 MAXIMUM NUMBER AND SIZE OF SIGNS PERMITTED WITHIN NON-RESIDENTIAL ZONING DISTRICTS

The maximum size and type of signs (wall, projecting and freestanding), that may be permitted in each zoning district is as indicated subject to the following limitations:

Zoning District	Types of Signs Permitted	Max. Size of a Freestanding Sign (sq. ft.)	Max. Size of a Wall Sign	Max. Size of a Projecting Sign (sq. ft.) (2)
C-1	Wall, Freestanding, or Projecting	100 per face	10% of wall area (1)	40 per face
I-1	Wall, Freestanding	75 per face	5% of wall area (1)	N/A
Footnote (1): Wall area facing public right-of-way.				

1512 Determining the Number of Signs

For determining the number of signs, a sign shall be considered a single display surface or display device containing elements organized, related, and composed to form a unit. Where matter is displayed in a random manner without organized relationship of elements, each element shall be considered a single sign.

1513 COMMON SIGNAGE PLANS FOR MULTIPLE USES

In lieu of the requirements elsewhere in this chapter, when a structure contains more than one business establishment, or when the owners of two or more contiguous lots voluntarily agree to develop common signage, a common signage plan may be submitted and approved as part of the site plan review process. Common signage plans may not exceed the following limitations:

1513.01 Maximum Sign Area

The total maximum sign area of all types (freestanding, wall, or attached to any building) shall not exceed either three (3) square feet of signage per lineal foot of street frontage, or five (5) percent of the ground floor of the principal building, or one thousand (1,000) square feet, whichever is less.

1513.02 Maximum Area of Wall Signs

The total maximum building wall area that may be used for signage is fifteen (15) percent of the wall area.

1513.03 Maximum Number of Free Standing Signs

Free standing signs are limited to one (1), for each five hundred (500) feet of frontage.

1514 GENERAL PROVISIONS

The following general provisions apply to all signs:

1514.01 Signs Not to Constitute a Traffic Hazard

No sign or other advertising structure as regulated by any of the provisions of this chapter shall be erected at the intersection of any streets in such a manner as to obstruct free and clear vision; or at any location where, by reason of the position, shape or color, it may interfere with, obstruct the view of, or be confused with, and authorized traffic sign, signal or device; which makes use of the words "STOP," "LOOK," "DRIVE-IN," or any other word, phrase, symbol or character in such a manner as to interfere with, mislead or confuse traffic.

1514.02 Unsafe and Unlawful Signs

The owner of any sign regulated by this chapter is hereby required to maintain in good condition and repair properly all parts and supports of the sign. If the Zoning Inspector finds that any sign or other advertising structure regulated herein is unsafe or insecure, or is a menace to the public, or has been constructed or erected or is being maintained in violation of any of the provisions of this chapter, notice shall be given in writing by the Zoning Inspector to the permittee thereof.

1514.03 Presumption of Responsibility

The occupant of any premises upon which a violation of any of the provisions of this chapter is apparent or the owner of any sign placed or remaining anywhere in violation of any of the provisions of this chapter shall be deemed prima-facie responsible for the violation so evidenced and subject to the penalty provided therefore.

1514.04 Nonconforming Existing Signs

Every sign or other advertising structure lawfully in existence on the effective date of this ordinance, shall not be replaced, altered or relocated, except as such may be required by law or resolution, unless it is made to comply with the provisions of this chapter.

1514.05 Removal of Political Signs

All political signs must be removed five (5) days following the date of the election.

CHAPTER 16
NONCONFORMITIES

1600 Intent

Within the districts established by this Resolution or amendments that may later be adopted there exists lots, use of land, structures, and use of structures and land in combination which were lawful before this Resolution was passed or amended, but would be prohibited, regulated, or restricted under the terms of this Resolution or future amendments. It is the intent of this Resolution that nonconformities shall not be enlarged upon, expanded or extended, nor be used as grounds for adding other structures or use prohibited elsewhere in the same district.

1601 Nonconforming Lots of Record

In any district in which single-family dwellings are permitted, a single-family dwelling and customary accessory buildings may be erected on any single lot of record at the effective date of adoption or amendment of this Resolution, notwithstanding limitations imposed by other provisions of this Resolution. Such lot must be in separate ownership and not of continuous frontage with other lots in the same ownership.

If two or more lots or a combination of lots and portions of lots with continuous frontage in single ownership are of record at the time of passage or amendment of this Resolution and if all or part of the lots with no buildings do not meet the requirements established for lot width and area, the lands involved shall be considered an undivided parcel for the purpose of this Resolution and no portion of said parcel shall be used or sold in a way that diminishes compliance with lot width and area requirements established by this Resolution, nor shall any division of any parcel be made which creates a lot with a width or area below the requirements stated in this Resolution.

1602 Continuance of Non-Conforming Use of Land

Where, at the time of adoption of this Resolution, lawful uses of land exist which would not be permitted by the regulations imposed by this Resolution, the use may be continued so long as they remain otherwise lawful, provided:

1) No such non-conforming use shall be enlarged or increased, nor extended to occupy a greater area of land than was occupied by such use at the effective date of or amendment of this Resolution.

2) No such non-conforming use shall be moved in whole or in part to any portion of the lot or parcel other than that occupied by such use at the effective date of or amendment of this Resolution.

1603 Continuance of Non-Conforming Structures

Where a lawful structure exists at the effective date of adoption or amendment of this Resolution that could not be built under the terms of this Resolution by reason of restriction on areas, lot coverage, height, yards, its location on the lot, bulk, or other requirements concerning the structure, such structure may be continued so long as it remains otherwise lawful, subject to the following provisions:

1) No such non-conforming structure may be enlarged in a way which increases its nonconformity, without prior approval from the Board of Zoning Appeals, but any structure or portion thereof may be altered to decrease its nonconformity. For example, without prior approval from the Board of Zoning Appeals, an existing building which has a side yard setback of ten (10) feet, and is located in a district where a twenty (20) foot side setback is required, may not be enlarged so that the existing ten (10) foot side yard setback is reduced below ten (10) feet, or lengthened along that side yard.

2) Should such structure be moved for any reason for any distance whatever, it shall thereafter conform to the regulations for the district in which it is located after it is moved, unless prior approval is granted by the Board of Zoning Appeals.

1604 Discontinuance of Non-Conforming Structures and/or Non-Conforming Uses

Any non-conforming structure, non-conforming use, or non-conforming structure and use in combination, which is discontinued, destroyed, moved, or otherwise eliminated, for any reason, or act of God, may be reconstructed, rebuild, re-instituted or other reestablished, provided the following conditions are met:

1) A zoning permit is applied for and issued within two (2) years from the date that such non-conforming use or structure ceased to exist, and such rebuilding or reestablishment of use, is diligently pursed to completion.

2) Any restoration, reconstruction, or reestablishment of any structure or use shall not increase non-conformance or noncompliance with this Resolution that existed previously.

1605 Repairs and Maintenance

On any nonconforming structure or portion of a structure containing a non-conforming use, work may be done on ordinary repairs, or on repair or replacement of non-bearing walls, fixtures, wiring, or plumbing, provided that the cubic content existing when it became non-conforming; shall not be increased. Nothing in this section shall be deemed to prevent the strengthening or restoring to a safe condition of any building or part thereof declared to prevent the strengthening or restoring to a safe condition of any building or part thereof declared to be unsafe by any official charged with protecting the public safety, upon order of such official. Where appropriate, a permit for such activities shall be required.

CHAPTER 17
ENFORCEMENT

1700 Zoning Inspector
A Duchouquet Township Zoning Inspector shall be appointed by the Duchouquet Township Trustees, and he or she may receive such compensation and reimbursement of expenses as determined by the Township Trustees.

1701 Zoning Inspectors Bond
In accordance with ORC 519.161, the Zoning Inspector shall provide a bond conditioned upon the faithful performance of his or her official duties.

1702 Zoning Inspectors Responsibilities
The Duchouquet Township Zoning Inspector shall have the following responsibilities:

1) Review Applications for Zoning Permits;
2) On-site inspections;
3) Investigation of Violations; and
4) Maintain records of zoning activity including non-conforming and conditional use.

1703 Zoning Permits Required
No building or other structure, including temporary structures, shall be erected, moved, added to, structurally altered, nor shall any building, structure, or land be established or changed in use without a permit therefore, issued by the zoning inspector. Zoning permits shall be issued only in conformity with the provisions of this Resolution unless the zoning inspector receives a written order from the Board of Zoning Appeals deciding an appeal, conditional use, or variance. There are four (4) types of zoning permits as defined hereunder:

1703.01 Construction Permit
Before any structure, as defined in this Resolution is built, erected, enlarged, or placed on a property, a construction permit is required. The Zoning Inspector shall issue such a construction permit when he or she is satisfied that according to the information submitted by the applicant, the proposed structure will conform with all requirements of this Resolution. Such permits shall be displayed on the subject property until construction is completed.

1703.02 Use Permit
If the use of a property or structure changes, a use permit shall be required. The Zoning Inspector shall issue such a use permit when he or she is satisfied that, according to the information submitted by the applicant, such change of use does conform to the requirements of this Resolution.

1703.03 Conditional Use Permit
As described in Section 1904 the Board of Zoning Appeals has the authority to issue a conditional use permit. Such permits authorize a particular use with or without specific conditions required by the Board of Zoning Appeals.

1703.04 Sign Permit

Before any sign, except those exempted in Section 1502, may be placed, constructed, or structurally altered, on or attached to a building, or on a parcel of land, a sign permit is required.

1704 Application Forms

The Duchouquet Township Trustees shall approve application forms for all types of activities and procedures to be used by the Zoning Inspector, as well as the Board of Zoning Appeals and Zoning Commission. Nothing herein, or within the application forms themselves shall preclude a requirement for an applicant providing additional information needed to determine if a proposed activity would be in conformance with this Resolution. The application for zoning permit shall be signed by the owner or applicant attesting to the truth and exactness of all information supplied on the application. At a minimum, three (3) copies of the application shall be submitted.

1705 Approval of Zoning Permit

Within fourteen (14) days after the receipt of an application complete with all required information, the zoning inspector shall either approve or disapprove the application in conformance with the provisions of this Resolution. All zoning permits shall, however, be conditional upon the commencement of work within twelve (12) months. One copy of the site or plot plan shall be retained by the zoning inspector. The zoning inspector shall issue a placard upon payment of a fee as designated in a Resolution passed by the Duchouquet Township Trustees.

1706 Expiration of Zoning Permit

If the work described in any zoning permit has not begun within twelve (12) months from the date of issuance thereof, said permit shall expire; it shall be revoked by the zoning inspector; and written notice thereof shall be given to the persons affected. If the work described in any zoning permit has not been substantially completed within eighteen (18) months of the date of issuance thereof, said permit shall expire and be revoked by the zoning inspector, and written notice thereof shall be given to the persons affected, together with notice that further work as described in the canceled permit shall not proceed unless and until a new zoning permit has been obtained.

1707 Penalties for Violation

Violation of the provisions of this Resolution or failure to comply with any of its requirements, including a failure to obtain a zoning permit, or violation of conditions and safeguards established in various sections of this Resolution, or failure to comply with any of its requirements, shall cause the violator thereof to be fined as set forth in Ohio Revised Code Section 519.99, and in addition, pay all costs and expenses involved in the case. Each day such violation continues, after receipt of a violation notice, may be considered a separate offense. The owner or tenant of any building, structure, premises, or part thereof, and any architect, builder, contractor, agent, or other person who commits, participates in, assists in, or maintains such violation may each be found guilty of a separate offense, and suffer the penalties herein provided. Nothing herein contained shall prevent the township from taking such other lawful action as is necessary to prevent or remedy any violation.

1708 Schedule of Fees, Charges, and Expenses

The Board of Township Trustees shall, by resolution, establish a schedule of fees, charges, and expenses and a collection procedure for zoning permits, amendments, appeals, variances, conditional use permits, plan approvals, and other matters concerning the administration and enforcement of this Resolution requiring investigation, inspections, legal advertising, postage, and other expenses. The schedule of fees shall be available in the

office of the zoning inspector, and may be altered or amended only by the Board of Township Trustees. No permit will be issued until the appropriate fee has been paid, and no hearing or appeal will be conducted until the requested deposit has been posted with Duchouquet Township. All fees will be triple the normal cost if the permits are not secured before engaging in the activity that requires the permit.

CHAPTER 18
ZONING COMMISSION

1800 COMPOSITION OF THE TOWNSHIP ZONING COMMISSION

The Duchouquet Township Zoning Commission shall be composed of five (5) members who reside in the unincorporated area of the township who shall be appointed by the Board of Duchouquet Township Trustees. Members of the Zoning Commission shall be removable for nonperformance of duty, misconduct in office, or other cause, by the Board of Township Trustees,

Members of the Zoning Commission may resign by written notice to the Board of Duchouquet Township Trustees. Such vacancies shall be filled by the Board of Township Trustees for the remaining unexpired term.

1801 ORGANIZATION

The Township Zoning Commission may, within the limits of the moneys appropriated by the Board of Township Trustees for the purpose, employ or contract with such planning consultants and executives and other assistants as it deems necessary. The Zoning Commission shall organize, adopt rules for the transaction of its business, and keep a written record of its actions and determinations. Members of the Zoning Commission may be allowed their expenses as the Board may approve and provide.

1802 MEETINGS

Meetings of the Commission shall be held at the call of the Chairman and at such other times as a majority of the Commission determines. All meetings of the Commission shall be open to the public and advertised in accordance with the Ohio Revised Code. The Commission shall keep minutes of its proceedings showing the vote, indicating such fact, and shall keep records of its examinations and other official actions, all of which shall be immediately filed in the office of the Board of Township Trustees and be a public record. A quorum to conduct a meeting shall consist of at least three (3) members of the Zoning Commission.

1803 DUTIES OF THE ZONING COMMISSION

The Township Zoning Commission shall have the following duties:

1) Initiate proposed amendments to this Resolution;

2) Consider and review all proposed amendments to this Resolution and make recommendations to the Board of Township Trustees;

3) Consider and review all proposed special uses and changes in nonconforming uses and make a recommendation to the Board of Township Trustees; and

4) Review all Planned Unit Developments and make recommendations to the Board of Township Trustees.

CHAPTER 19
BOARD OF ZONING APPEALS

1900 DUCHOUQUET TOWNSHIP BOARD OF ZONING APPEALS

The Duchouquet Township Board of Zoning Appeals shall consist of five (5) members who shall be residents of the unincorporated areas of Duchouquet Township. The terms of all members shall be so arranged so that the term of one (1) member expires each year. Members shall be removable for the same cause and in the same manner as provided by sections 519.04 of the ORC. Vacancies shall be filled by the township trustees for the unexpired terms. Members of the Board of Zoning Appeals may resign by written notice to the Board of Township Trustees.

1901 PROCEEDINGS OF THE BOARD OF ZONING APPEALS

The Board shall adopt rules necessary to the conduct of its affairs in keeping with the provisions of this Resolution. Meetings shall be held at the call of the chairman and at such other times as the Board may determine after advertisement in accordance with the Ohio Revised Code. The chairman, or in his absence the acting chairman, may administer oaths and compel the attendance of witnesses. All meetings shall be open to the public. The Board shall keep minutes of its proceedings, showing the vote of each member upon each question, or if absent or failing to vote, indicating such fact, and shall keep records of its examination and other official actions, all of which shall be filed in the office of the Duchouquet Township Trustees and is a public record.

A quorum to conduct a meeting shall consist of at least three (3) members of the Board of Zoning Appeals.

1902 POWERS OF THE BOARD OF ZONING APPEALS

The Duchouquet Township Board of Zoning Appeals may:

1) Hear and decide appeals where it is alleged there is error in any order, requirement, decision, or determination made by an administrative official in the enforcement of this Resolution;

2) Authorize, upon appeal, in specific cases, such variances from the terms of the zoning resolution as will not be contrary to the public interest, where, owing to special conditions, a literal enforcement of the resolution will result in unnecessary hardship, and so that the spirit of the resolution shall be observed and substantial justice done;

3) Grant conditional zoning certificates for the use of land, buildings, or other structures if such certificates for specific use are provided for in this Resolution;

4) Revoke an authorized variance or conditional zoning certificate previously granted, if any condition of the variance or certificate is violated. The board shall notify the holder of the variance or certificate by certified mail of its intent to revoke the variance or certificate under this section and of his or her right to a hearing before the Board of Zoning Appeals, within thirty days of the mailing of the notice, if he so requests; and

5) Hear and decide upon all matters of interpretation of this Resolution. This includes interpretation of the text of this Resolution as well as the Zoning Map.

1903 RULES, ORGANIZATION AND MEETINGS OF THE BOARD OF ZONING APPEALS

1) The Board of Zoning Appeals shall organize and adopt rules in accordance with the zoning resolution. Meetings of the board of zoning appeals shall be held at the call of the chairman and at such other times as the board determines. The chairman, or in his absence the acting chairman, may administer oaths, and the board of zoning appeals may compel the attendance of witnesses. All meetings of the Board of Zoning Appeals shall be open to the public. The Board of Zoning Appeals shall keep minutes of its proceedings showing the vote of each member upon each question, or, if absent or failing to vote, indicating such fact, and shall keep records of its examinations and other official actions, all of which shall be immediately filed in the office of the board of township trustees and be a public record.

2) Appeals, applications for conditional use, or other relevant matters may be taken before the Board of Zoning Appeals with the submittal of forms to the Zoning Inspector. Any appeals of a decision made by the Zoning inspector must be made within twenty (20) days following the decision or interpretation of the zoning inspector.

3) The Board of Zoning Appeals shall fix a reasonable time for the public hearing of the appeal, or other matter being brought before it, and shall give at least ten (10) days notice in writing to the parties in interest, and shall give notice of such public hearing by one publication in one or more newspapers of general circulation in the area at least ten (10) days before the date of such hearing. The applicant shall also furnish the names and addresses of all property owners (including those across the road) which directly adjoin the property in question, and notices of the public hearing shall be mailed to those adjoining property owners ten (10) days before the hearing.

1904 GENERAL STANDARDS APPLICABLE TO CONDITIONAL USES

1) The Board of Zoning Appeals shall review the particular facts and circumstances of each proposed conditional use in terms of the following and shall find adequate evidence showing that such use at the proposed location:

   a) Is in fact a conditional use as established under the provisions of this Resolution;

   b) Will be designed, constructed, operated, and maintained to be harmonious and appropriate in appearance with the existing or intended character of the general vicinity and that such use will not change the essential character of the area;

   c) Will not be hazardous or disturbing to neighboring use;

   d) Will be served adequately by essential public facilities and services such as highways, streets, police and fire protection, drainage structures, refuse disposal, and schools, or that the persons or agencies responsible for the establishment of the proposed use can provide adequately any such services;

   e) Will not create excessive additional public cost for public facilities and services and therefore will not be detrimental to the economic welfare of the community;

   f) Will not involve use, activities, processes, materials, equipment and conditions of operations that will be detrimental to any persons, property, or the general

welfare by reason of excessive production of traffic, noise, smoke, fumes, glare, or odor;

g) Will have vehicular approaches to the property which shall be so designed as not to create an interference with traffic on surrounding public thoroughfares;

h) Will not result in the destruction, loss, or damage of a natural, scenic, or historic features of major importance; and

i) Will promote public health, safety, and morals.

2) In granting any conditional use, the Board of Zoning Appeals may prescribe appropriate conditions and safeguards in conformity with this Resolution. Violations of such conditions and safeguards, when made a part of the terms under which the conditional use is granted, shall be deemed a violation of this Resolution and punishable under Section 1708 of this Resolution.

3) A conditional use permit shall be deemed to authorize only one particular conditional use and said permit shall automatically expire if, for any reason, the conditional use shall cease for two (2) years.

1905 GENERAL STANDARDS APPLICABLE TO VARIANCES

The Board of Zoning Appeals shall hear requests for variances to allow a deviation from the strict application of the dimensional standards and requirements within a given zoning district. In no case shall the granting of a variance allow any type of change in use. The Board of Zoning Appeals shall only have the authority to hear and decide upon requests for variances from measurable development requirements such as yard dimensions, height limitations, lot sizes, number of parking spaces required, etc. Further, the Board of Zoning Appeals shall only grant variances when it finds that the following circumstances are true:

1) That there are special or unique circumstances which are peculiar and unique to the land or structures involved which are not the result of actions of the applicant;

2) That the strict application of the provisions of this Resolution would deprive the applicant of the rights commonly enjoyed by other properties in the same Zoning District;

3) That the variance will not confer on the applicant any unique privileges that are not enjoyed by other property in the same zoning district;

4) That the variance would represent the smallest departure necessary from the requirements of this Resolution necessary to permit the reasonable use of the property; and

5) That the variance will not affect the health, safety and welfare of the persons within the vicinity of the proposed variance.

CHAPTER 20
AMENDMENTS

2000 INITIATION OF ZONING AMENDMENTS

Amendments to this Resolution may involve an amendment of the text on this Resolution or the Zoning Map, and may be initiated in one of the following ways:

1) By adoption of a motion by the Zoning Commission;

2) By adoption of a resolution by the Board of Township Trustees; and

3) By the filing of an application by at least one owner or lessee of property within the area proposed to be changed or affected by said amendment.

2001 APPLICATIONS AND FEES FOR AMENDMENTS

When an amendment is initiated by an owner or lessee of property within the area proposed to be affected by an amendment, an application shall be filed along with an application fee. The application form and the amount of the fee shall be specified by the Township Trustees in a separate resolution.

2002 REFERENCE TO OHIO REVISED CODE FOR AMENDMENT OF ZONING RESOLUTION AND ZONING MAP

This Resolution incorporates by reference Section 519.12 et. seq. of the Ohio Revised Code for the amendment of this Zoning Resolution and Zoning Map. Future amendments to the Ohio Revised Code will be automatically incorporated in and supersede requirements in this Resolution. For convenience, the following represents the required amendment procedure specified in relevant part of ORC 519.12 at the time of adoption of this Resolution:

2003 AMENDMENTS TO ZONING RESOLUTION; PROCEDURE; REFERENDUM

1) Amendments to the zoning resolution may be initiated by motion of the township zoning commission, by the passage of a resolution therefore by the board of township trustees, or by the filing of an application therefore by one or more of the owners or lessees of property within the area proposed to be changed or affected by the proposed amendment with the township zoning commission.

   a) The board of township trustees may require that the owner or lessee of property filing an application to amend the zoning resolution pay a fee therefore to defray the cost of advertising, mailing, filing with the county recorder, and other expenses. If the township trustees require such a fee, it shall be required generally, for each application.

   b) The board of township trustees shall upon the passage of such resolution certify it to the township zoning commission.

2) Upon the adoption of such motion, or the certification of such resolution or the filing of such application, the township zoning commission shall set a date for a public hearing thereon, which date shall not be less than twenty (20) nor more than forty (40) days from the date of the certification of such resolution or the date of adoption of such motion or the date of the filing of such application.

3) Notice of such hearing shall be given by the township zoning commission by one publication in one or more newspapers of general circulation in the township at least ten (10) days before the date of such hearing.

a) If the proposed amendment intends to rezone or redistrict ten (10) or fewer parcels of land, as listed on the county auditor's current tax list, written notice of the hearing shall be mailed by the zoning commission, by first class mail, at least ten (10) days before the date of the public hearing to all owners of property within and contiguous to and directly across the street from such area proposed to be rezoned or redistricted to the addresses of such owners appearing on the county auditor's current tax list. The failure of delivery of such notice shall not invalidate any such amendment.

b) If the proposed amendment intends to rezone or redistrict ten (10) or fewer parcels of land as listed on the county auditor's current tax list, the published and mailed notices shall set forth the time, date, and place of the public hearing, and shall include all of the following:

(1) The name of the zoning commission that will be conducting the public hearing;

(2) A statement indicating that the motion resolution, or application is an amendment to the zoning resolution;

(3) A list of the addresses of all properties to be rezoned or redistricted by the proposed amendment and of the names of owners of these properties, as they appear on the county auditor's current tax list;

(4) The present zoning classification of property named in the proposed amendment and the proposed zoning classification of such property;

(5) The time and place where the motion, resolution, or application proposing to amend the zoning resolution will be available for examination for a period of at least ten (10) days prior to the public hearing;

(6) The name of the person responsible for giving notice of the public hearing by publication or by mail, or by both publication and mail;

(7) Any other information requested by the zoning commission; and

(8) A statement that after the conclusion of such hearing the maker will be submitted to the Board of Township Trustees for its action.

c) If the proposed amendment alters the text of the zoning resolution, or rezones or redistricts more than ten (10) parcels of land, as listed on the county auditor's current tax list, the published notice shall set forth the time, date, and place of the public hearing and shall include all of the following:

(1) The name of the zoning commission that will be conducting the public hearing on the proposed amendment;

(2) A statement indicating that the motion, application, or resolution is an amendment to the zoning resolution;

(3) The time and place where the text and maps of the proposed amendment will be available for examination for a period of at least ten (10) days prior to the public hearing;

(4) The name of the person responsible for giving notice of the public hearing by publication;

(5) A statement that after the conclusion of such hearing the matter will be submitted to the Board of Township Trustees for its action; and

(6) Any other information requested by the zoning commission.

4) Within five (5) days after the adoption of such motion or the certification of such resolution or the filing of such application the township zoning commission shall transmit a copy thereof together with text and map pertaining thereto to the county or regional planning commission, if there is such a commission.

a) The county or regional planning commission shall recommend the approval or denial of the proposed amendment or the approval of some modification thereof and shall submit such recommendation to the township zoning commission.

b) Such recommendation shall be considered at the public hearing held by the township zoning commission on such proposed amendment.

5) The township zoning commission shall within thirty (30) days after such hearing, recommend the approval or denial of the proposed amendment, or the approval of some modification thereof and submit such recommendation together with such application or resolution, the text and map pertaining thereto and the recommendation of the county or regional planning commission thereon to the Board of Township Trustees.

6) The Board of Township Trustees shall, upon receipt of such recommendation, set a time for a public hearing on such proposed amendment, which date shall not be more than thirty (30) days from the date of the receipt of such recommendation from the township zoning commission.

7) Notice of such public hearing shall be given by the board by one publication in one or more newspapers of general circulation in the township at least ten (10) days before the date of such hearing.

a) If the proposed amendment intends to rezone or redistrict ten (10) or fewer parcels of land as listed on the county auditor's current tax list, the published notice shall set forth the time, date, and place of the public hearing and shall include all of the following:

(1) The name of the board that will be conducting the public hearing;

(2) A statement indicating that the motion, application, or resolution is an amendment to the zoning resolution;

(3) A list of the addresses of all properties to be rezoned or redistricted by the proposed amendment and of the names of owners of these properties as they appear on the county auditor's current tax list;

(4) The present zoning classification of property named in the proposed amendment and the proposed zoning classification of such property;

(5) The time and place where the motion, application, or resolution proposing to amend the zoning resolution will be available for examination for a period of at least ten (10) days prior to the public hearing;

(6) The name of the person responsible for giving notice of the public hearing by publication or by mail, or by both publication and mail; and

(7) Any other information requested by the board.

b) If the proposed amendment alters the text of the zoning resolution, or rezones or redistricts more than ten (10) parcels of land as listed on the County auditor's current tax list, the published notice shall set forth the time, date, and place of the public hearing, and shall include all of the following:

(1) The name of the board that will be conducting the public hearing on the proposed amendment;

(2) A statement indicating that the motion, application, or resolution is an amendment to the zoning resolution;

(3) The time and place where the text and maps of the proposed amendment will be available for examination for a period of at least ten (10) days prior to the public hearing;

(4) The name of the person responsible for giving notice of the public hearing by publication; and

(5) Any other information requested by the board.

8) Within twenty (20) days after such public hearing the board shall either adopt or deny the recommendations of the zoning commission or adopt some modification thereof. In the event the board denies or modifies the recommendation of the township zoning commission the unanimous vote of the board shall be required.

9) Such amendment adopted by the board shall become effective in thirty (30) days after the date of such adoption unless within thirty (30) days after the adoption of the amendment there is presented to the board of township trustees a petition, signed by a number of registered electors residing in the unincorporated area of the township or part thereof included in the zoning plan equal to not less than eight (8%) per cent of the total vote cast for all candidates for governor in such area at the last preceding general election at which a governor was elected, requesting the board of township trustees to submit the amendment to the electors of such area for approval or rejection at a special election to be held on the day of the next primary or general election.

a) Each part of this petition shall contain the number and the full and correct title, if any, of the zoning amendment resolution, motion, or application, furnishing the name by which the amendment is known and a brief summary of its contents. In addition to meeting the requirements of this section, each petition shall be governed by the rules specified in section 3501.38 of the Revised Code.

b) The form of a petition calling for a zoning referendum and the statement of the circulator shall be substantially as follows:

"PETITION FOR ZONING REFERENDUM"

(If the proposal is identified by a particular name or number, or both, these should be inserted here)

A proposal to amend the zoning map of the unincorporated area of Duchouquet Township, Auglaize County, Ohio, adopted _____ (date)_____(followed by brief summary of the proposal).

To the Board of Township Trustees of _____ Township, _____ County, Ohio:

We, the undersigned, being electors residing in the unincorporated area of Township, included within the Duchouquet Township Zoning Plan, equal to not less than eight (8%) per cent of the total vote cast for all candidates for governor in the area at the preceding general election at which a governor was elected, request the board of township trustees to submit this amendment of the zoning resolution to the electors of Duchouquet Township residing within the unincorporated area of the township included in the Duchouquet Township Zoning Resolution, for approval or rejection at a special election to be held on the day of the next primary or general election to be held on _____ (date) _____, pursuant to Section 519.12 of the Revised Code.

Signature:	Street Address or R.F.D.:	Township:	Precinct:	County:	Date of Signing:

STATEMENT OF CIRCULATOR

_____ (name of circulator) _____ declares under penalty of election falsification that he is an elector of the state of Ohio and resides at the address appearing below his signature _____ hereto; that he is the circulator of the foregoing part petition containing _____ (number) _____ signatures; that he witnessed the affixing of every signature; that all signers were to the best of his knowledge and belief qualified to sign; and that every signature is to the best of his knowledge and belief the signature of the person whose signature it purports to be.

(Signature of Circulator)
(Address)
(City/Village/Twp and Zip Code)

"THE PENALTY FOR ELECTION FALSIFICATION IS IMPRISONMENT FOR NOT MORE THAN SIX MONTHS, OR A FINE OF NOT MORE THAN ONE THOUSAND DOLLARS, OR BOTH."

c) The petition shall be filed, accompanied by an appropriate map of the area affected by the zoning proposal, with the Board of Township Trustees, which shall then transmit the petition within two (2) weeks of its receipt to the board of elections, which shall determine the sufficiency and validity of the petition. The petition shall be certified to the board of elections not less than seventy-five (75) days prior to the election at which the question is to be voted upon.

d) No amendment for which such referendum vote has been requested shall be put into effect unless a majority of the vote cast on the issue is in favor of the amendment. Upon certification by the board of elections that the amendment has been approved by the voters it shall take immediate effect.

10) Within five (5) working days after an amendment's effective date, the board of township trustees shall file the text and maps of the amendment in the office of the county recorder and with the regional or county planning commission, if one exists.

11) The board shall file all amendments, including text and maps, which are in effect on January 1, 1992, in the office of the county recorder within thirty (30) working days after that date. The board shall also file duplicates of the same documents with the regional or county planning commission, if one exists, within the same period.

12) The failure to file any amendment, or any text and maps or duplicates of any of these documents, with the office of the county recorder or the county or regional planning commission as required by this section does not invalidate the amendment and is not grounds for an appeal of any decision of the board of zoning appeals.

CHAPTER 21
DEFINITIONS

For the purpose of this Resolution certain terms and words are defined as follows. Words used in the present tense include the future, and the plural includes the singular, and the singular the plural. The word "shall" is intended to be mandatory; "occupied" or "used" shall be considered as though followed by the words "or intended, arranged, or designed to be used or occupied." Except where specifically defined, all words used in this Resolution shall carry their customary meanings.

Accessory Use: A use incidental to, and on the same lot, as a principal use. Accessory uses include any use of a subordinate nature to the principal use on the same lot. An accessory use also includes a pond.

Accessory Structure: A subordinate structure including those without a permanent foundation, detached from but located on the same lot as the principal structure, the use of which is incidental and accessory to that of the principal structure (i.e., movable storage sheds, play equipment, L.P. gas tanks, fences and similar structures).

Advertising Sign: See Billboard.

Adult Family Home: Means a residence or facility that provides accommodations to three to five unrelated adults and supervision and personal care services to at least three of those adults.

Adult Group Home: Means a residence or facility that provides accommodations to six to sixteen unrelated adults and provides supervision and personal care services to at least three of the unrelated adults.

Agriculture: The use of land for agricultural purposes, including farming, dairying, pasturage agriculture, horticulture, floriculture, viticulture, and animal and poultry husbandry and the necessary accessory uses for packing, treating, or storing the produce; provided, however, that the operation of any such accessory uses shall be secondary to that of normal agricultural activities.

Alteration: Any change, addition, or modification in construction or occupancy of an existing structure.

Amusement Arcade: A building or part of a building in which five or more pinball machines, video games, or other similar player-operated amusement devices are maintained.

Animated Sign: A sign or display manifesting either kinetic or illusionary motion occasioned by natural, manual, mechanical, electrical, or other means.

Automobile Repair Garage: A building designed and used for the storage, care, repair, or refinishing of motor vehicles including both minor and major mechanical overhauling, paint, and body work.

Billboard: A sign that identifies or communicates a commercial or noncommercial message related to an activity conducted, a service rendered, or a commodity sold at a location other than where the sign is located.

Boarding House: An establishment with lodging for five or more persons where meals are regularly served for compensation and where food is placed upon the table family style, without service or ordering of individual portions from a menu. Also includes rooming house and fraternity or sorority houses.

Buffer yard: A landscaped area intended to separate and partially obstruct the view of two adjacent land uses or properties from one another.

Car Wash: An area of land and/or a structure with a machine or hand-operated facilities used principally for the cleaning, washing, polishing, or waxing of motor vehicles.

Central Water or Sewer System: A facility and water distribution or sewage collection system owned by a government entity or corporation and under the regulatory jurisdiction of the Ohio Environmental Protection Agency.

Child Care Facility: A building or structure where care, protection, and supervision are provided, on a regular schedule, at least twice a week to at least seven children.

Church or Place of Religious Worship: An institution that people regularly attend to participate in or hold religious services, meetings, and other activities. The term "church" shall not carry a secular connotation and shall include buildings in which the religious services of any denomination are held.

Clinic: A building designed and used for the diagnosis and treatment of human patients that does not include overnight care facilities.

Club: Buildings or facilities owned or operated by a corporation, association, or persons for a social, educational, or recreational purpose; but not primarily for profit or to render a service that is customarily carried on as a business.

Commercial Message: Any sign wording, logo, or other representation that, directly or indirectly, names, advertises, or calls attention to a business, product, service, or other commercial activity.

Community or Club Swimming Pools: A community or club swimming pool shall be any pool constructed by an association of property owners, or by a private club for use and enjoyment by members of the association or club and their families.

Congregate Housing: A residential facility for four or more elderly persons (as defined by Federal Fair Housing Laws) within which are provided living and sleeping facilities, meal preparation, laundry services, and room cleaning. Such facilities may also provide other services, such as transportation for routine social and medical appointments, and counseling.

Copy: The graphic content of a sign surface in either permanent or removable letter, pictographic, symbolic, or alphabetic form.

Density: The number of dwelling units permitted per net acre of land (excluding any public right-of-way).

Development: All structures and other modifications of the natural landscape above and below ground or water, on a particular site.

Dwelling: A building or portion thereof used exclusively for residential purposes, including one-family, two-family, and multiple-family dwellings complying with the local building codes or built completely or partially off site complying with the basic building codes of the State of Ohio for Industrialized Units. The term "dwelling" shall include those involving industrialized units, but not including, mobile homes, manufactured homes, recreational vehicles, hotels and boarding and lodging houses.

Dwelling Unit: One or more rooms physically arranged to create an independent housekeeping establishment for occupancy by one family with separate toilets and facilities for cooking and sleeping; and each unit having a separate entrance.

Family: Any number of individuals living together as a single housekeeping unit and doing their cooking on the premises, as distinguished from a group occupying a boarding or rooming house or hotel.

Fence: Any artificially constructed barrier of any material or combination of materials erected to enclose or screen areas of land.

Floodplain: means any land area designated as being susceptible to flooding according to maps and information provided by the Federal Emergency Management Agency.

Frontage: The front or frontage is that side of a lot abutting on a street or way and ordinarily regarded as the front of the lot, but it shall not be considered as the ordinary side line of a corner lot.

Funeral Home: A building or part thereof used for human funeral services. Such building may contain space and facilities for: a) embalming and the performance of other services used in preparation of the dead for burial; b) the performance of autopsies and other surgical procedures; c) the storage of caskets, funeral urns, and other related funeral supplies; and d) the storage of funeral vehicles, but shall not include facilities for cremation. Where a funeral home is permitted, a funeral chapel shall also be permitted.

Grade: The lowest point of elevation of the finished surface of the ground, paving, or sidewalk within the area between the building and the property line, or when the property line is more than five feet from the building, between the building and a line five feet from the building.

Gross Floor Area: The sum of the areas of all floors in a building, including areas used for human occupancy in basements, attics, and penthouses, as measured from the exterior faces of the walls. Gross floor area does not include cellars, unenclosed porches, or attics not used for human occupancy, or any floor space in accessory buildings, or in the main building intended and designed for the parking of motor vehicles in order to meet the parking requirements of this Resolution, or any such floor space intended and designed for accessory heating and ventilating equipment. It shall include the horizontal area at each floor level devoted to stairwells and elevator shafts.

Height (of a sign): The vertical distance measured from the highest point of the sign, excluding decorative embellishments, to the grade of the adjacent street or the surface grade beneath the sign, whichever is less.

Historical Motor Vehicle: Any motor vehicle of the age of 25 years or more which is defined pursuant to Ohio Revised Code Section 4501.01 (G) and eligible for a collector's license pursuant to Section 4503.45.

Home Occupation: An occupation, profession, activity, or use that is clearly a customary, incidental, and secondary use of a residential dwelling unit.

Hospital: An institution specializing in giving clinical, temporary, and emergency services of a medical or surgical nature to human patients and injured persons, and licensed by state law to provide facilities and services in surgery, obstetrics, and general medical practice.

Hotel: A facility offering transient lodging accommodations on a daily rate to the public and providing additional services, such as restaurants, meeting rooms, and recreational facilities.

Industrialized Dwelling Unit: An assembly of materials or products comprising all or part of a total structure which when constructed is self-sufficient or substantially self-sufficient and when installed, constitutes a dwelling unit, except for necessary preparations for its placement. Industrialized units include units commonly referred to as modular or prefabricated units, but do not include mobile homes, or manufactured homes as separately defined.

Inoperable Motor Vehicle: A vehicle which, at the request of the zoning inspector, will not start and move on its own power a minimum of two times in a period of time not less than twenty days or more than forty (40) days.

Junk: Used machinery, scrap, iron, steel, other ferrous and nonferrous metals, tools, implements or portions thereof, glass, plastic, cordage, building materials, or other waste that has been abandoned from its original use and may be used again in its present or in a new form.

Junk Yard: An area where junk, wastes or used or secondhand materials are bought, sold, exchanged, stored, processed, or handled. Materials shall include but are not limited to junk motor vehicles, scrap iron, and other metals, paper, rags, rubber tires, and bottles.

Junk Motor Vehicle: Any motor vehicle that is: three years old or older; is extensively damaged, such damage including but not limited to missing wheels, tires, motor or transmission; apparently inoperable; and not having a current registration.

Laundry: A business that provides home-type washing, drying, and/or ironing machines for hire to be used by customers on the premises.

Lot: A parcel of land intended to be separately owned, developed, and otherwise used as a unit.

Lot Line: A line dividing one lot from another lot or from a street or alley.

Lot Line, Front: The line nearly parallel with the fronting road. In those instances where two such lines exist, all measurements for set back purposes shall be made from the line furthest from the road's edge.

Lot Line, Side: Any lot line not a front or rear lot line.

Lot Line, Rear: The lot line not intersecting a front lot line that is most distant from and most closely parallel to the front lot line. A lot bounded by only three lot lines will not have a rear lot line.

Lot Width: The horizontal distance between side lot lines measured at the required front setback line.

Lot of Record: A lot for which the existence, location, and dimensions have been legally recorded or registered in a deed or on a plat.

Lot, Corner: A lot abutting on and at the intersection of two or more streets.

Lot, Interior: An interior lot is a lot other than a corner lot.

Lot Coverage: Determined by dividing that area of a lot which is occupied or covered by the total horizontal projected surface of all buildings, including covered porches and accessory buildings, by the gross area of that lot.

Lot Area: The area of horizontal plane bounded by the vertical planes through front, side, and rear lot lines, excluding any land in the public right-of-way.

Lot Depth: The average horizontal distance between the front and rear lot lines.

Manufactured Home Park: A parcel of land under single ownership that has been planned and improved for the placement of manufactured housing and for mobile homes for residential purposes.

Manufactured Home: A factory-built, single-family structure that is manufactured under the authority of 42 U.S.C. Sec. 5401, the National Manufactured Home Construction and Safety Standards Act, of 1974, is transportable in one or more sections, is built on a permanent chassis, and is used as a place of human habitation; but which is not constructed with a permanent hitch or other device allowing transport of the unit other than for the purpose of delivery to a permanent site, and which does not have wheels or axles permanently attached to its body or frame. The removal of wheels, frame, and/or other equipment used in transporting said manufactured home, and/or placement on a permanent foundation such as blocks, poured concrete or other materials used in permanent foundations, shall not be cause for reclassification to that of a permanent or immobile home or dwelling.

Master Plan: The long-range plan, and any updates thereto, describing the desirable use of land as adopted by the Township; the purpose of such plan being, among other purposes, to serve as a guide in future development and zoning for the Township.

Message: The wording or copy on a sign.

Mineral Extraction, Storage, and Processing: Any mining, quarrying or processing of limestone, sand, gravel, oil, natural gas, or other mineral resources.

Mobile Home: A transportable, factory built home, built on a permanent chassis, and is used as a place of human habitation and built prior to the enactment of the Federal Manufactured Home Construction and Safety Standards Act of 1974 which became effective June 15, 1976; which is constructed with a permanent hitch or other device allowing transport of the unit other than for the purpose of delivery to a permanent site, and which does have wheels or axles permanently attached to its body or frame. The removal of wheels,

frame, and/or other equipment used in transporting said mobile home, and/or placement on a permanent foundation such as blocks, poured concrete or other materials used in permanent foundations, shall not be cause for reclassification to that of a permanent or immobile home or dwelling.

Motel (See also hotel): A building or group of detached or connected buildings designed or used primarily for providing sleeping accommodations for automobile travelers and having a parking space adjacent to a sleeping room. An automobile court or a tourist court with more than one unit or a motor lodge shall be deemed a motel.

Nonconforming Use: A lawful use of land that does not comply with the use regulations for its zoning district.

Nonconforming Lot: A lot which does not meet the requirements of this Zoning Resolution due to size and/or other lot dimension.

Office: A building or portion of a building wherein services are performed involving predominantly administrative, professional, or clerical operations.

Open Space: An area intended to provide light and air, and designed for either environmental, scenic, or recreational purposes. Open space may include, but is not limited to, lawns, decorative planting, walkways, active and passive recreation areas, playgrounds, fountains, swimming pools, wooded areas, and water courses. Open space shall not be deemed to include driveways, parking lots, or other surfaces designed or intended for vehicular travel.

Outdoor storage: The keeping, in an unroofed area, of any goods, junk, material, merchandise, or vehicles in the same place for more than 30 days.

Parcel: A continuous quantity of land in the possession of or owned by, or recorded as the property of, the same person, persons, or entity. See also "Lot."

Parking Space: An area on a lot and/or within a building intended for the use of temporary parking of a personal vehicle. This term is used interchangeably with parking stall. Each parking space must have a means of access to a public street. Tandem parking stalls in single-family detached, single-family attached, and town home residential uses shall be considered to have a means of access to a public street.

Parking Lot: (See also garage, public) An area not within a building where motor vehicles may be stored for the purposes of temporary, daily, or overnight off-street parking.

Permanent Foundation: A perimeter support wall of concrete block or cement at least thirty inches deep on a footer.

Planned Unit Development: A planned development is built according to general and detailed plans that include not only streets, utilities, lots and building location, and the like, but also site plans for all buildings as are intended to be located, constructed, used, and related to each other, and plans for other uses and improvements on the land as related to the buildings. A planned development includes a program for the provisions, operations, and maintenance of such areas, facilities, and improvements as will be for common use by some or all of the occupants of the planned development district, but which will not be provided, operated, or maintained at general public expense.

Political Sign: A temporary sign used in connection with a local, state, or national election or referendum.

Portable Sign: Any sign not permanently attached to the ground or other permanent structure, or a sign designed to be transported, including, but not limited to, signs designed to be transported by means of wheels; signs converted to A- or T-frames; menu and sandwich board signs; balloons used as signs; umbrellas used for advertising; and signs attached to or painted on vehicles parked and visible from the public right-of-way, unless said vehicle is used in the normal day-to-day operations of the business.

Private Swimming Pool: Shall be any pool, or open tank, exclusive of portable swimming pools, not located within a completely enclosed building and containing or normally capable of containing water to a depth at any point greater than one and one-half (1-½) feet.

Principal Use: The main use of land or structures, as distinguished from a secondary or accessory use.

Principal Building: A building in which the primary use of the lot on which the building is located is conducted.

Projecting Sign: A sign, other than a flat wall sign, which is attached to and projects from a building wall or other structure not specifically designed to support the sign.

Public Uses: The government owned facilities to which the public has access such as public parks, schools, school administrative buildings, recreational, cultural and service buildings, but does not include public land or buildings devoted solely to the storage and maintenance of equipment and material or the disposal of refuse.

Real Estate Sign: A temporary sign advertising the real estate upon which the sign is located as being for rent, lease, or sale.

Restaurant: An establishment that serves food and beverages primarily to persons seated within the building. This includes cafes, tea rooms, and outdoor cafes.
Right-of-way: An area or strip of land, either public or private, on which an irrevocable right-of-passage has been recorded for the use of vehicles or pedestrians or both.

Road, Private: A way open to vehicular ingress and egress established as a separate tract for the benefit of certain, adjacent properties. This definition shall not apply to driveways.

Road, Public: All public property reserved or dedicated for street traffic.

Roof Sign: Any sign erected and constructed wholly on and over the roof of a building, supported by the roof structure, and extending vertically above the highest portion of the roof.

Rooming House (See also Boarding House): A building that is the primary residence of the owner and in which rooms are provided by the owner, for compensation, to three or more adult persons not related by blood, marriage, or adoption to the owner.

Satellite Dish Antenna: A device incorporating in excess of 24" in diameter, a reflective surface that is solid, open mesh, or bar configured and is in the shape of a shallow dish, cone, horn, or cornucopia. Such device shall be used to transmit and/or receive radio or electromagnetic waves between terrestrially and/or orbital-based uses. This definition is meant to include but not be limited to what are commonly referred to as satellite earth stations, television reception only satellite dish antennas (TVROs), and satellite microwave antennas.

Seasonal Sign or Holiday Sign: Signs such as Christmas decorations or those used for a holiday, and installed for a limited period.

School: A facility that provides a curriculum of elementary and secondary academic instruction, including kindergartens, elementary schools, junior high schools, and high schools.

Screening: The method by which a view of one site from another adjacent site is shielded, concealed, or hidden. Screening techniques include fences, walls, hedges, berms, or other features.

Seating Capacity: The actual seating capacity of an area based upon the number of seats or one seat per 18 inches of bench or pew length.

Self-Service Storage Facility: A building consisting of individual, small, self-contained units leased or owned for the storage of business and household goods excluding boats or recreational vehicles.

Service Station (See also garage, repair): Any premises where gasoline and other petroleum products are sold and/or light maintenance activities such as engine tune-ups, lubrication, minor repairs, and carburetor cleaning are conducted. Service stations shall not include premises where heavy automobile maintenance activities such as engine overhauls, automobile painting, and body fender work are conducted.

Setback(s): The required minimum horizontal distance between the building line and the related front, side, or rear property line.

Sign: Any device, fixture, placard, or structure that uses any color, form, graphic, illumination, symbol, or writing to advertise, announce the purpose of, or identify the purpose of a person or entity, or to communicate information of any kind to the public.

Sign: Any device or visual communication used for the purpose of bringing the subject thereof to the attention of the public.

Sign, Billboard: See billboard.

Sign, Flashing: Any sign, which, by method or manner of illumination, flashes on or off, winks, or blinks with varying light intensity, shows motion, or creates the illusion of motion or revolves in a manner to create the illusion of being on or off.

Sign, Free Standing: A sign supported by one or more upright poles, columns, or braces placed in or on the ground and not attached to any building or structure. Free standing signs include ground mounted signs.

Sign, Illuminated: A sign illuminated in any manner by an artificial light source.

Sign, Projecting: Any sign other than a wall sign attached to and projects from the wall or face of a building or structure, including an arcade/marquee sign.

Sign, Portable: Any sign not permanently affixed to the ground or to a building, including any sign attached to or displayed on a vehicle used for the expressed purpose of advertising a business establishment, product, service, or entertainment, when that vehicle is so parked as to attract the attention of the motoring or pedestrian traffic.

Sign, Roof: Any sign erected upon, against, or directly above a roof or roof eave, or on top or above the parapet, or on a functional architectural appendage above the roof or roof eave.

Sign, Temporary: A display, informational sign, banner, or other advertising device constructed of cloth, canvas, fabric, wood, or other temporary material, with or without a structural frame, and intended for a limited period of display, including decorative displays for holidays or public demonstrations, real estate for sale signs located on the property for sale.

Sign, Window: A sign painted, stenciled, or affixed on a window, which is visible from a right-of-way.

Sign, Wall: A sign painted on the outside of a building, or attached to, and placed parallel to the face of a building and supported by such building.

Sign Face: The entire area of sign on which copy could be placed.

Sign Structure: Any structure which supports, has supported or is capable of supporting a sign, including decorative cover.

Sign, awning, canopy, or marquee: A sign painted, stamped, perforated, or stitched, or otherwise applied on the valance of an awning.

Sign Area: The entire area within a continuous perimeter, enclosing the extreme limits of sign display, including any frame or border. Curved, spherical, or any other shaped sign face shall be computed on the

basis of actual surface area. The copy of signs composed of individual letters, numerals, or other devices shall be the sum of the area of the smallest rectangle or other geometric figure encompassing each of said letter or devices. The calculation for a double-faced sign shall be the area of one face only.

Site Plan: A plan, prepared to scale, showing accurately and with complete dimensioning, the boundaries of a site and the location of all buildings, structures, uses, and principal site development features proposed for a specific parcel of land.

Special Use: A use that, owing to some special characteristics attendant to its operation or installation, is permitted in a district subject to approval by the Zoning Commission and Township Trustees, and subject to special requirements, different from those usual requirements for the district in which the special use may be located.

Street: A public or private thoroughfare used, or intended to be used, for passage or travel by motor vehicles.

Structure: Anything constructed or erected, the use of which requires location on the ground, or attachment to something having a fixed location on the ground. Among other things, structures include buildings, walls, fences, and billboards.

Temporary Sign: Any sign that is used only temporarily and is not permanently mounted.

Variance: A dispensation permitted on individual parcels of property as a method of alleviating unnecessary hardship by allowing a reasonable deviation from the dimensional (i.e., height, bulk, yard) requirements of this Resolution because of unusual or unique circumstances.

Wall Sign: Any sign attached parallel to, but within six (6) inches of, a wall, painted on the wall surface of, or erected and confined within the limits of an outside wall of any building or structure, which is supported by such wall or building, and which displays only one (1) sign surface.

Warehouse: A building used primarily for the storage of goods and materials (not including self-service storage facilities).

Warehousing and Distribution: A use engaged in storage, wholesale, and distribution of manufactured products, supplies, and equipment, but excluding bulk storage of materials that are inflammable or explosive or that create hazardous or commonly recognized offensive conditions.

Window Sign: Any sign, pictures, symbol, or combination thereof, designed to communicate information about an activity, business, commodity, event, sale, or service, that is placed inside a window or upon the interior window panes or glass and is visible from the exterior of the window.

Yard, Side: A yard lying between the side lot line of the lot and the nearest line of the building and extending from the front yard to the rear yard, or in the absence of either of such front or rear yards, to the front or rear lot lines.

Yard, Rear: A yard extending across the full width of the lot and lying between the rear lot line and the nearest line of the building. Rear yard depth shall be measured at right angles to the rear line of the lot.

Yard, Front: A yard extending along the full width of a front lot line between side lot lines and from the front lot line to the front building line in depth.

Yard: Any open space located on the same lot with a building, unoccupied and unobstructed from the ground, except for accessory structures, parking, or such projections as are expressly permitted in these regulations. The minimum depth or width of a yard shall consist of the horizontal distance between the lot line and the nearest point of the foundation wall of the main building.

Zero Lot Line: A zero lot line dwelling may be either, a dwelling that shares one common wall with a dwelling on an adjacent lot, or a dwelling that has one wall on one side lot line and does not share a common wall with an adjacent dwelling.

Permitted Use
Complete application form submitted to Zoning Inspector
14 Days Maximum
Zoning Inspector Issues Permit

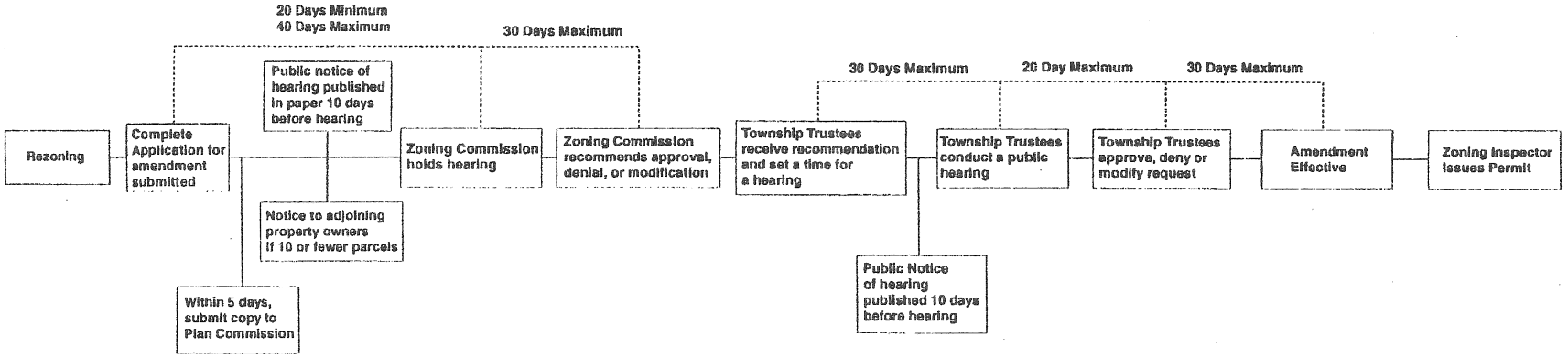
20 Days Minimum
40 Days Maximum
30 Days Maximum
30 Days Maximum
20 Day Maximum
30 Days Maximum
Public notice of hearing published in paper 10 days before hearing
Rezoning
Complete Application for amendment submitted
Zoning Commission holds hearing
Zoning Commission recommends approval, denial, or modification
Township Trustees receive recommendation and set a time for a hearing
Township Trustees conduct a public hearing
Township Trustees approve, deny or modify request
Amendment Effective
Zoning Inspector Issues Permit
Notice to adjoining property owners If 10 or fewer parcels
Within 5 days, submit copy to Plan Commission
Public Notice of hearing published 10 days before hearing

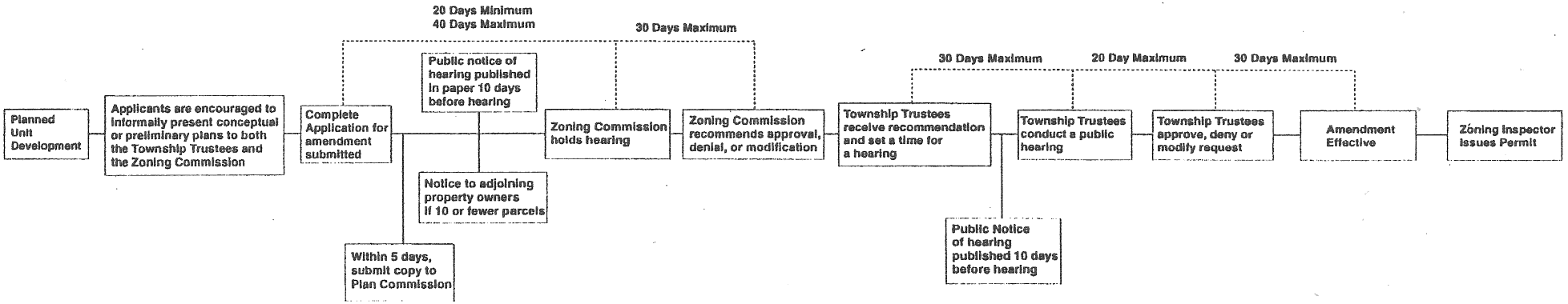
20 Days Minimum
40 Days Maximum
30 Days Maximum
30 Days Maximum
20 Day Maximum
30 Days Maximum
Public notice of hearing published in paper 10 days before hearing
Planned Unit Development
Applicants are encouraged to informally present conceptual or preliminary plans to both the Township Trustees and the Zoning Commission
Complete Application for amendment submitted
Zoning Commission holds hearing
Zoning Commission recommends approval, denial, or modification
Township Trustees receive recommendation and set a time for a hearing
Township Trustees conduct a public hearing
Township Trustees approve, deny or modify request
Amendment Effective
Zoning Inspector Issues Permit
Notice to adjoining property owners If 10 or fewer parcels
Within 5 days, submit copy to Plan Commission
Public Notice of hearing published 10 days before hearing

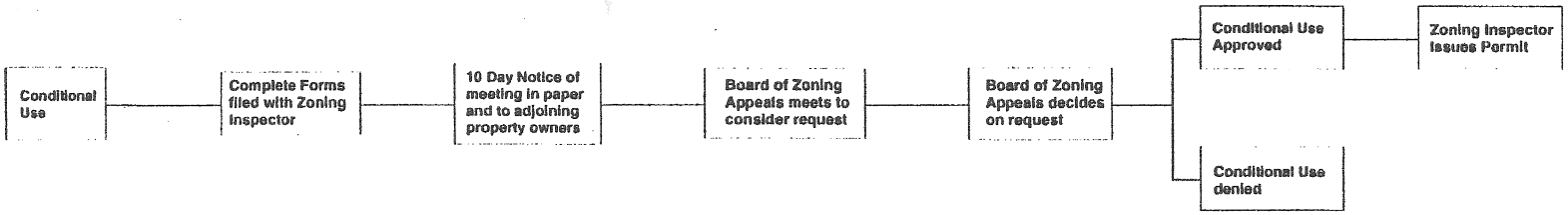
Conditional Use
Complete Forms filed with Zoning Inspector
10 Day Notice of meeting in paper and to adjoining property owners
Board of Zoning Appeals meets to consider request
Board of Zoning Appeals decides on request
Conditional Use Approved
Zoning Inspector Issues Permit
Conditional Use denied

Duchouquet Township Zoning Resolution

Yard Requirements

Available Building Area

POGGEMEYER DESIGN GROUP, INC.
ARCHITECTS + ENGINEERS + PLANNERS (419) 352-7537

A-1 Agricultural District

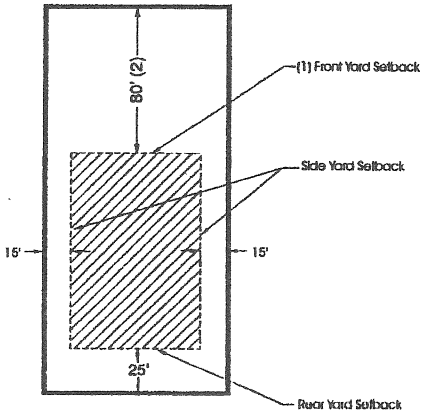

Minimum Lot Area = 43,560 Sq. Ft.

(1) Minimum Lot Width is Measured at Front Yard Setback Line.

(2) The Front Yard Setback is 50' if the Lot is on a County or Township Road.

R-1 Low Density Residential District (Served by Sewer and Water)

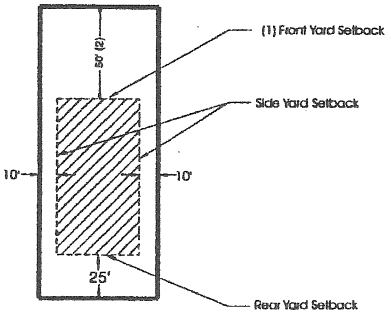

Minimum Lot Area = 9,000 Sq. Ft.

(1) Minimum Lot Width is Measured at Front Yard Setback Line.

(2) The Front Yard Setback is 35' if the Lot is on a County or Township Road.

R-1 Low Density Residential District (Not Served by Sewer or Water)

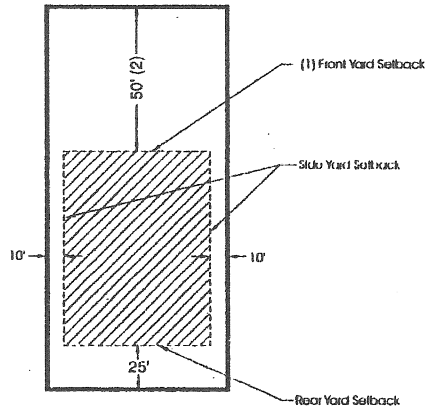

Minimum Lot Area = 43,560 Sq. Ft.

(1) Minimum Lot Width is Measured at Front Yard Setback Line.

(2) The Front Yard Setback is 35' if the Lot is on a County or Township Road.

R-1 Low Density Residential District (Served by Sewer but Not Water)

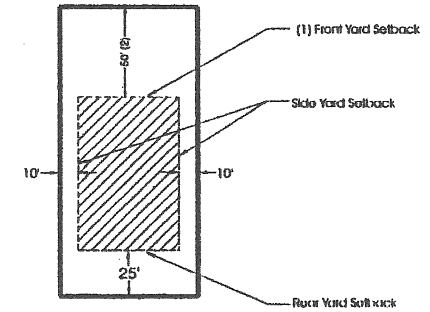

Minimum Lot Area = 12,000 Sq. Ft.

(1) Minimum Lot Width is Measured at Front Yard Setback Line.

(2) The Front Yard Setback is 35' if the Lot is on a County or Township Road.

R-2 High Density Multi-Family Residential District (Sewer and Water Required)

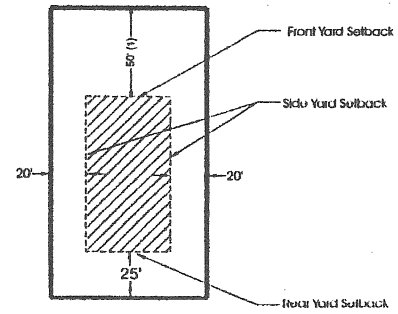

The Maximum Density of Dwelling Units per Acre of Land is 10.

(1) The Front Yard Setback is 35' if the Lot is on a County or Township Road.

F: pdg/clients/3510/014/planning/setbacks.cdr

THE OFFICIAL
DUCHOUQUET TOWNSHIP
ZONING MAP

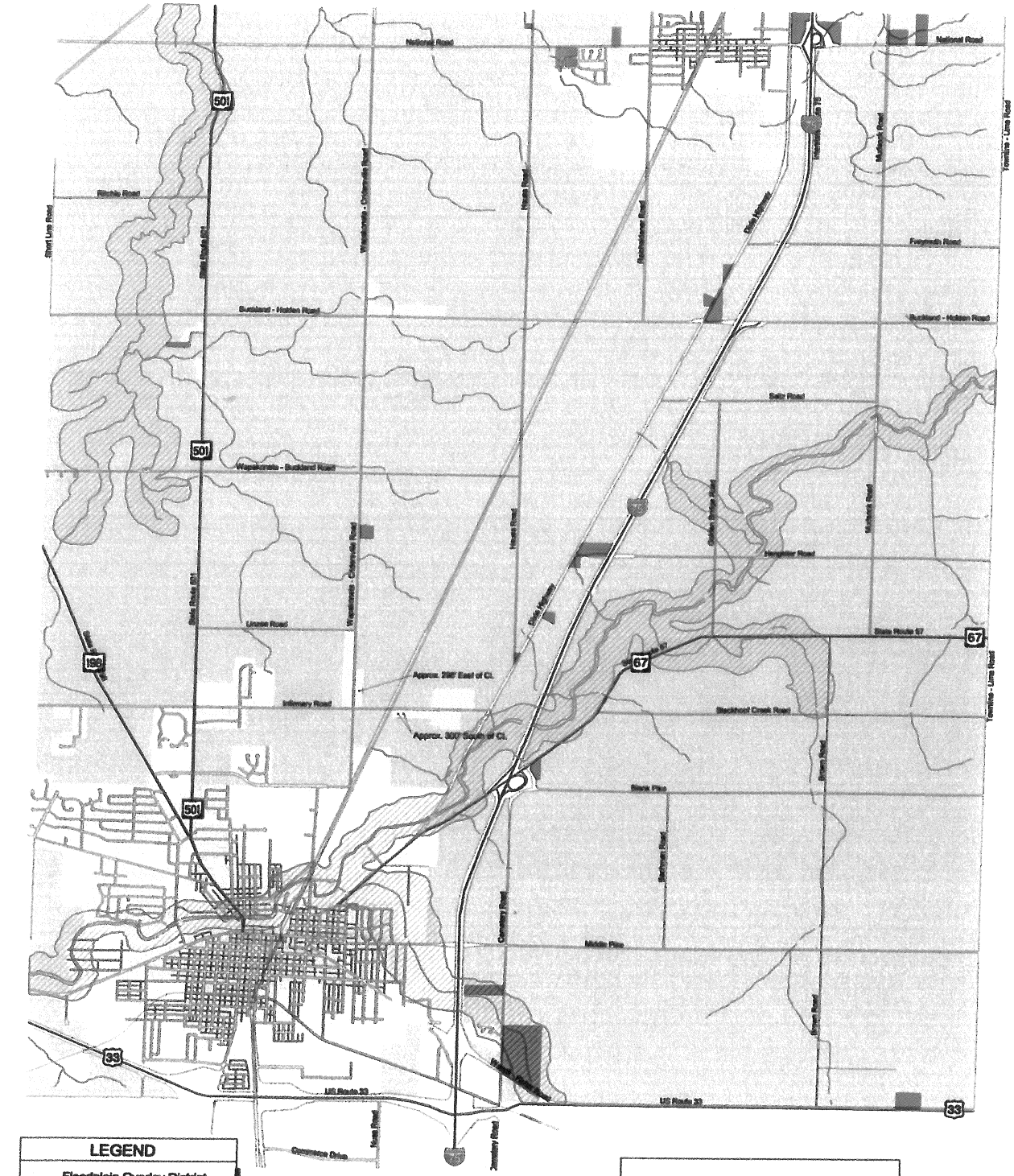

LEGEND

- Floodplain Overlay District
- Agricultural
- R-1 Low Density Residential
- R-2 High Density Residential
- Manufactured Home Park
- C-1 General Commercial
- I-1 General Industrial
- Corporation Limits
- Railroad
- Rivers/Streams
- Parcels
- Highways
- Streets/Roads

1500 0 1500 3000 Feet

Includes all amendments and municipal corporation boundary changes through 12/31/2011.

_____ Trustee, Duchouquet Township

_____ Trustee, Duchouquet Township

_____ Trustee, Duchouquet Township

_____ Clerk, Duchouquet Township

RESOLUTION
(Adopting Amendments/revisions to the Duchouquet Township Zoning Resolution)

WHEREAS the zoning Commission of Duchouquet Township has recommended the approval of amendment to the Duchouquet Township Zoning Resolution; proposing amendments that would amend/revise the Duchouquet Township Zoning Resolution; amend the Section 502 of the Duchouquet Township Zoning Resolution regarding Conditional uses within the Agricultural District, by adding to items that can be sold within the Agricultural District., as set forth within exhibit "A" attached hereto; and

WHEREAS, a Public Hearing was held on Monday, May 21, 2012, at 8:00 p.m. in the Duchouquet Township House, Duchouquet Township, Ohio after publication in the Wapakoneta Daily News on May 9, 2012; and

WHEREAS, a Public Hearing was held at the time and place described in said publication; and

WHEREAS, said recommendations were accepted by the Board of Township Trustees, by a unanimous vote of all members present;

THEREFORE BE IT RESOLVED that said amendment, a copy of which is attached hereto, be, and hereby is, adopted and that said amendment shall become effective 30 days after the date of this Resolution.

BE IT FURTHER RESOLVED that the Duchouquet Township Fiscal Officer mail or deliver a copy of this Resolution, with attached amendments, to the Secretary of the Zoning Commission, the Secretary of the Board of Zoning Appeals, the Township Zoning Inspector, the Secretary of the Regional Planning Commission and record a copy with the Auglaize County Recorder's Office.

* *

The foregoing Resolution was duly adopted at a regular meeting of the Duchouquet Township Board of Trustees held on May 21, 2012.

Cathy M. Oen

Cathy Oen, Fiscal Officer
Duchouquet Township

EXHIBT A

502 CONDITIONALLY PERMITTED USES

11) General retail of goods produced off the premises;